Zoom-Zoom

All children instinctively know it.

A few adults still remember it.

One unique car company refuses to outgrow it.

In grown-up language, it means the exhilaration and

liberation that come from experiencing sheer motion.

But as usual, children put it much better and simply call it " Go Zoom-Zoom."

We practice it every day.

It's why we build the kind of cars we do.

Zoom-Zoom.

Can we re-awaken it in you today?

A Word to Mazda Owners

Thank you for choosing a Mazda. We at Mazda design and build vehicles with complete customer satisfaction in mind.

To help ensure enjoyable and trouble-free operation of your Mazda, read this manual carefully and follow its recommendations.

An Authorized Mazda Dealer knows your vehicle best. So when maintenance or service is necessary, that's the place to go.

Our nationwide network of Mazda professionals is dedicated to providing you with the best possible service.

We assure you that all of us at Mazda have an ongoing interest in your motoring pleasure and in your full satisfaction with your Mazda product.

Mazda Motor Corporation
HIROSHIMA, JAPAN

Important Notes About This Manual
Keep this manual in the glove box as a handy reference for the safe and enjoyable use of your Mazda. Should you resell the vehicle, leave this manual with it for the next owner.

All specifications and descriptions are accurate at the time of printing. Because improvement is a constant goal at Mazda, we reserve the right to make changes in specifications at any time without notice and without obligation.

Event Data Recorder
This vehicle is equipped with an event data recorder. In the event of a crash, this device records data related to vehicle dynamics and safety systems for a short period of time. These data can help provide a better understanding of the circumstances in which crashes and injuries occur and lead to the designing of safer vehicles.

Air Conditioning and the Environment
Your Mazda's genuine air conditioner is filled with HFC134a (R134a), a refrigerant that has been found not to damage the earth's ozone layer. If the air conditioner does not operate properly, consult an Authorized Mazda Dealer.

Perchlorate
Certain components of this vehicle such as [air bag modules, seat belt pretensioners, lithium batteries, ...] may contain Perchlorate Material– Special handling may apply for service or vehicle end of life disposal. See www.dtsc.ca.gov/hazardouswaste/perchlorate.

Please be aware that this manual applies to all models, equipment and options. As a result, you may find some explanations for equipment not installed on your vehicle.

©2007 Mazda Motor Corporation
Printed in Japan Aug. 2007(Print1)

How to Use This Manual

We want to help you get the most driving pleasure from your vehicle. Your owner's manual, when read from cover to cover, can do that in many ways.

Illustrations complement the words of the manual to best explain how to enjoy your Mazda. By reading your manual, you can find out about the features, important safety information, and driving under various road conditions.

The symbol below in this manual means “Do not do this” or “Do not let this happen”.

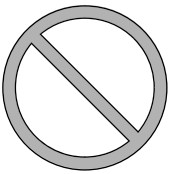

Index: A good place to start is the Index, an alphabetical listing of all information in your manual.

You'll find several WARNINGs, CAUTIONs, and NOTEs in the manual.

⚠ WARNING

A WARNING indicates a situation in which serious injury or death could result if the warning is ignored.

⚠ CAUTION

A CAUTION indicates a situation in which bodily injury or damage to your vehicle, or both, could result if the caution is ignored.

NOTE

A NOTE provides information and sometimes suggests how to make better use of your vehicle.

The symbol below, located on some parts of the vehicle, indicates that this manual contains information related to the part. Please refer to the manual for a detailed explanation.

Table of Contents

Your Vehicle at a Glance 1
Interior, exterior views and part identification of your Mazda.

Essential Safety Equipment 2
Use of safety equipment, including seats, seat belt system, child-restraint systems and SRS air bags.

Knowing Your Mazda 3
Explanation of basic operations and controls; opening/closing and adjustment of various parts.

Before Driving Your Mazda 4
Important information about driving your Mazda.

Driving Your Mazda 5
Explanation of instruments and controls.

Interior Comfort 6
Use of various features for drive comfort, including air-conditioning and audio system.

In Case of an Emergency 7
Helpful information on what to do in an emergency.

Maintenance and Care 8
How to keep your Mazda in top condition.

Customer Information and Reporting Safety Defects 9
Important consumer information including warranties and add-on equipment.

Specifications 10
Technical information about your Mazda.

Index 11

1 Your Vehicle at a Glance

Interior, exterior views and part identification of your Mazda.

Dashboard and Interior Overview 1-2

Exterior Overview 1-4

Dashboard and Interior Overview

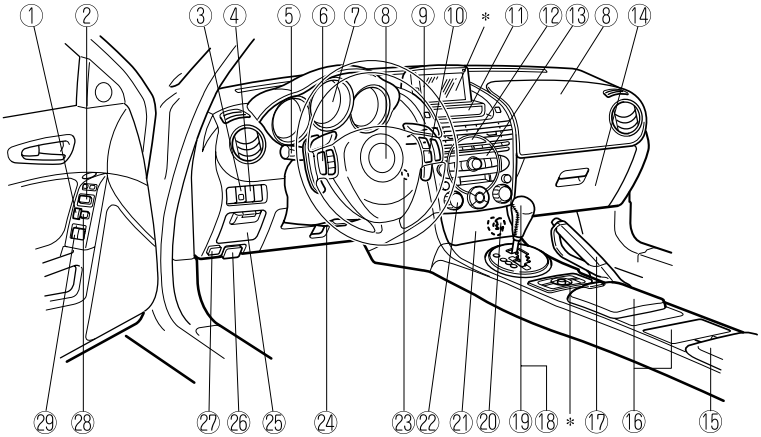

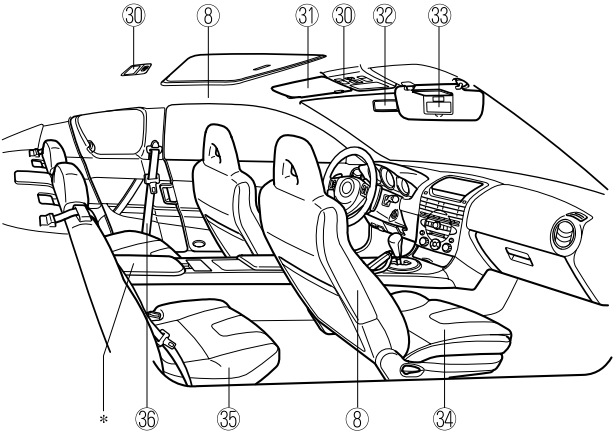

* Refer to Navigation System at the separate manual (if equipped).

Dashboard and Interior Overview

① Power door lock switch ..... page 3-28
② Outside mirror switch ..... page 3-48
③ Dashboard illumination ..... page 5-37
④ DSC OFF switch ..... page 5-24
⑤ Lighting control/Turn signals ..... page 5-55
⑥ Audio control switch ..... page 6-40
⑦ Instrument cluster ..... page 5-33
⑧ Air bags ..... page 2-33
⑨ Wiper and washer lever ..... page 5-58
⑩ Cruise control switches ..... page 5-20
⑪ Information display ..... page 6-45
⑫ Hazard warning flasher switch ..... page 5-61
⑬ Audio system ..... page 6-10
⑭ Glove box ..... page 6-50
⑮ Center console ..... page 6-51
⑯ Cup holder ..... page 6-49
⑰ Parking brake ..... page 5-6
⑱ MT shift lever ..... page 5-10
⑲ AT shift lever (Sport AT) ..... page 5-12
⑳ Lighter ..... page 6-47
㉑ Ashtray ..... page 6-48
㉒ Climate control system ..... page 6-2
㉓ Ignition switch ..... page 5-2
㉔ Tilt wheel release lever ..... page 3-48
㉕ Coin box ..... page 6-50
㉖ Hood release handle ..... page 3-38
㉗ Trunk release button ..... page 3-32
㉘ Power window lock switch ..... page 3-36
㉙ Power window switches ..... page 3-35
㉚ Interior light ..... page 6-43
㉛ Sunvisor ..... page 6-43
㉜ Rearview mirror ..... page 3-49
㉝ Vanity mirror ..... page 6-43
㉞ Front seats ..... page 2-2
㉟ Rear seat ..... page 2-8
㊱ Seat belt ..... page 2-9

Exterior Overview

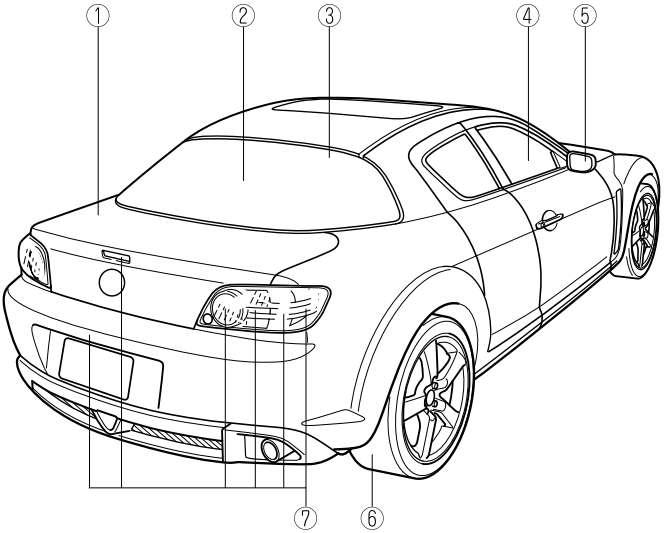

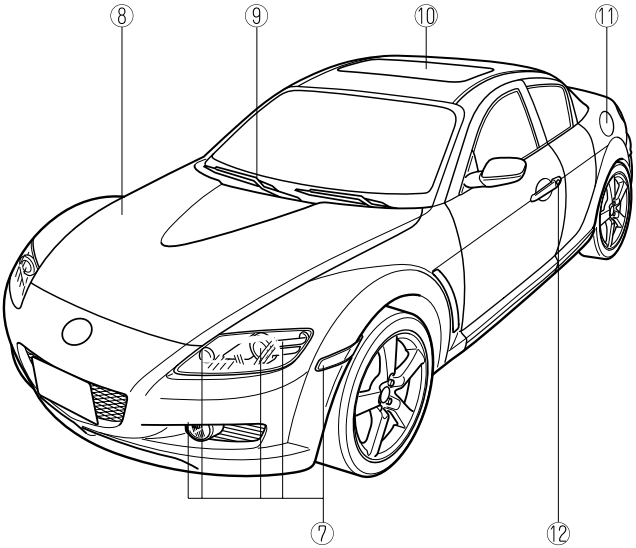

 The equipment and installation position varies by vehicle

Exterior Overview

① Trunk lid ..... page 3-31
② Rear window defroster ..... page 5-60
③ Antenna ..... page 6-10
④ Power windows ..... page 3-34
⑤ Outside mirror ..... page 3-48
⑥ Tires ..... page 8-22
⑦ Light bulbs ..... page 8-27
⑧ Hood ..... page 3-38
⑨ Windshield wiper blades ..... page 8-18
⑩ Moonroof ..... page 3-40
⑪ Fuel-filler lid ..... page 3-37
⑫ Doors and keys ..... page 3-27

2 Essential Safety Equipment

Use of safety equipment, including seats, seat belt system, child-restraint systems and SRS air bags.

Seats 2-2
Front Seats (Manually Operated Seats) 2-2
Front Seats (Electrically Operated Seats) 2-5
Rear Seat 2-8

Seat Belt Systems 2-9
Seat Belt Precautions 2-9
Location of Seat Belt 2-12
Seat Belt 2-13
Front Seat Belt Pretensioner and Load Limiting Systems 2-14
Seat Belt Extender 2-17
Seat Belt Warning Light/Beep 2-18

Child Restraint 2-20
Child Restraint Precautions 2-20
Installing Child-Restraint Systems 2-24
LATCH Child-Restraint Systems 2-30

SRS Air Bags 2-33
Supplemental Restraint Systems (SRS) Precautions 2-33
Supplemental Restraint System Components 2-37
How the Air Bags Work 2-40

Front Seats (Manually Operated Seats)

⚠ WARNING

Do not modify or replace the front seats:

Modifying or replacing the front seats such as replacing the upholstery or loosening any bolts is dangerous. The front seats contain air bag components essential to the supplemental restraint system. Such modifications could damage the supplemental restraint system and result in serious injury. Consult an Authorized Mazda Dealer if there is any need to remove or reinstall the front seats.

Do not drive with damaged front seats:

Driving with damaged front seats is dangerous. A collision, even one not strong enough to inflate the air bags, could damage the front seats which contain essential air bag components. If there was a subsequent collision, an air bag may not deploy which could lead to injuries. Always have an Authorized Mazda Dealer inspect the front seats, front seat belt pretensioners and air bags after a collision.

Make sure the adjustable components of a seat are locked in place:

Adjustable seats and seatbacks that are not securely locked are dangerous. In a sudden stop or collision, the seat or seatback could move, causing injury. Make sure the adjustable components of the seat are locked in place by attempting to slide the seat forward and backward and rocking the seatback.

▼Seat Slide

⚠ WARNING

Adjust the driver seat only when the vehicle is stopped:

Adjusting the driver's seat while the vehicle is moving is dangerous. The driver could lose control of the vehicle and have an accident.

To move a seat forward or backward, raise the lever and slide the seat to the desired position and release the lever.

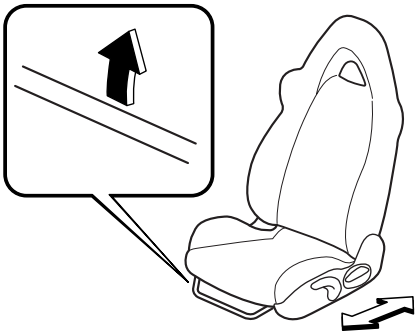

Make sure the lever returns to its original position and the seat is locked in place by attempting to push it forward and backward.

▼Seat Recline

WARNING

Do not drive with the seats reclined:

Sitting in a reclined position while the vehicle is moving is dangerous because you don't get the full protection from seat belts. During sudden braking or a collision, you can slide under the lap belt and suffer serious internal injuries. For maximum protection, sit well back and upright.

Always sit in a passenger seat properly with the seatback upright and feet on the floor:

If your vehicle is equipped with front passenger seat weight sensors, sitting in the front passenger seat improperly out of position or with the seatback reclined too far while the vehicle is moving is dangerous as it can take off weight from the seat bottom and affect the weight determination of the front passenger sensing system. As a result the front passenger will not have the supplementary protection of the air bag and seat belt pretensioner, which could cause result in serious injury. Always sit upright against your seatback, with your feet on the floor.

Do not drive with the seatback unlocked:

The seatback plays an important role in your protection in a vehicle. Leaving the seatback unlocked is dangerous as it can allow passengers to be ejected or thrown around and baggage to strike occupants in a sudden stop or collision, resulting in severe injury. After adjusting the seatback at any time, even when there are no other passengers, rock the seatback to make sure it is locked in place.

To change the seatback angle, lean forward slightly while raising the lever. Then lean back to the desired position and release the lever.

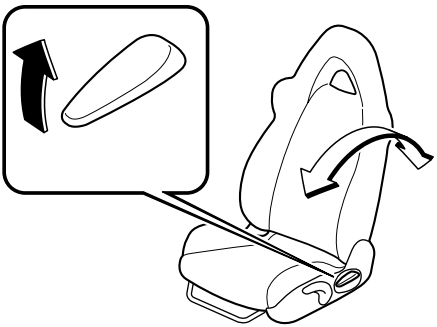

Make sure the lever returns to its original position and the seatback is locked in place by attempting to push it forward and backward.

⚠ CAUTION

When returning a rear-reclined seatback to its upright position, make sure you hold onto the seatback with your other hand while operating the lever. If the seatback is not supported, it will flip forward suddenly and could cause injury.

▼Height Adjustment (Driver's Seat)

By moving the seat lever up or down, the seat bottom height can be adjusted.

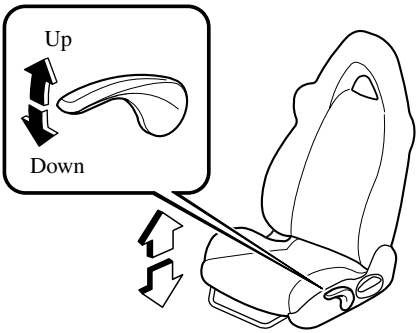

▼Folding the Passenger's Seat

⚠ WARNING

Do not drive with the seatback unlocked:

The seatback plays an important role in your protection in a vehicle. Leaving the seatback unlocked is dangerous as it can allow passengers to be ejected or thrown around and baggage to strike occupants in a sudden stop or collision, resulting in severe injury. After adjusting the seatback at any time, even when there are no other passengers, rock the seatback to make sure it is locked in place.

To fold the seatback, pull the lever and lower the seatback forward.

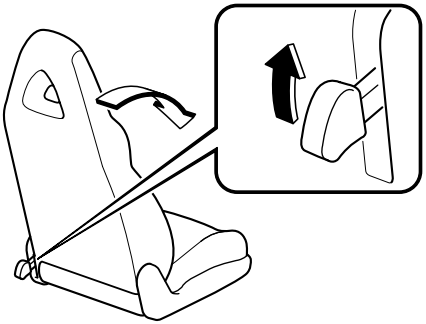

To return it to the upright position, lift the seatback and push it into place. Rock the seatback to make sure it is locked.

Front Seats (Electrically Operated Seats)

WARNING

Do not modify or replace the front seats:

Modifying or replacing the front seats such as replacing the upholstery or loosening any bolts is dangerous. The front seats contain air bag components essential to the supplemental restraint system. Such modifications could damage the supplemental restraint system and result in serious injury. Consult an Authorized Mazda Dealer if there is any need to remove or reinstall the front seats.

Do not drive with damaged front seats:

Driving with damaged front seats is dangerous. A collision, even one not strong enough to inflate the air bags, could damage the front seats which contain essential air bag components. If there was a subsequent collision, an air bag may not deploy which could lead to injuries. Always have an Authorized Mazda Dealer inspect the front seats, front seat belt pretensioners and air bags after a collision.

CAUTION

- *The seat-bottom power adjustment is operated by motors. Avoid extended operation because excessive use can damage the motors.*
- *To prevent the battery from running down, avoid using the power adjustment when the engine is stopped. The adjuster uses a large amount of electrical power.*
- *Don't use the switch to make more than one adjustment at a time.*

▼Seat Slide

To slide the seat, move the slide lifter switch on the outside of the seat to the front or back and hold it. Release the switch at the desired position.

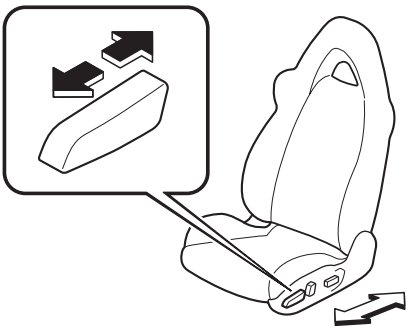

▼Seat Recline

⚠ WARNING

Do not drive with the seats reclined:
Sitting in a reclined position while the vehicle is moving is dangerous because you don't get the full protection from seat belts. During sudden braking or a collision, you can slide under the lap belt and suffer serious internal injuries. For maximum protection, sit well back and upright.

Always sit in a front passenger seat properly with the seatback upright and feet on the floor:
If your vehicle is equipped with front passenger seat weight sensors, sitting in the front passenger seat improperly out of position or with the seatback reclined too far while the vehicle is moving is dangerous as it can take off weight from the seat bottom and affect the weight determination of the front passenger sensing system. As a result the front passenger will not have the supplementary protection of the air bag and seat belt pretensioner, which could cause result in serious injury. Always sit upright against your seatback, with your feet on the floor.

Change the seatback angle by pressing the front or rear side of the reclining switch. Release the switch at the desired position.

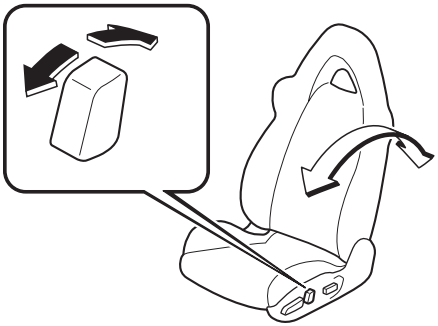

▼Height Adjustment

Front of seat bottom

To adjust the front height of the seat bottom, raise or lower the front of the slide lifter switch on the left side of the seat.

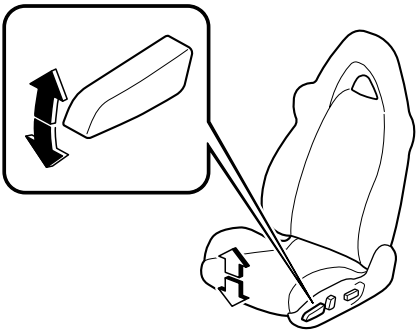

Rear of seat bottom

Raise or lower the back of the switch to adjust the rear height of the seat bottom.

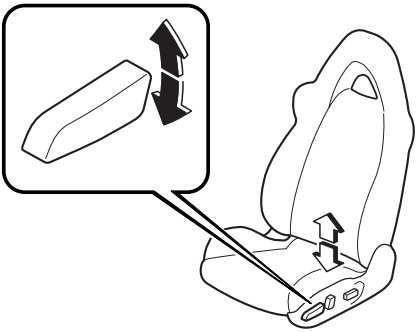

▼Lumbar Support Adjustment

The amount of lumbar support can be adjusted by pressing the switch.
To increase the seat firmness, press and hold the front part of the switch to the desired position, then release it.
Press the rear part of the switch to decrease firmness.

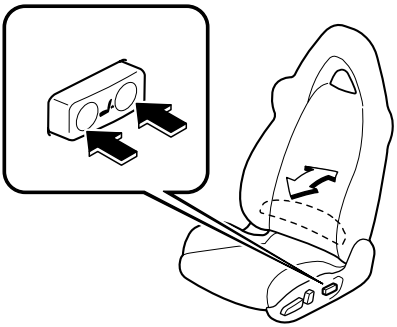

▼Folding the Passenger's Seat

⚠ WARNING

Do not drive with the seatback unlocked:

The seatback plays an important role in your protection in a vehicle. Leaving the seatback unlocked is dangerous as it can allow passengers to be ejected or thrown around and baggage to strike occupants in a sudden stop or collision, resulting in severe injury. After adjusting the seatback at any time, even when there are no other passengers, rock the seatback to make sure it is locked in place.

To fold the seatback, pull the lever and lower the seatback forward.

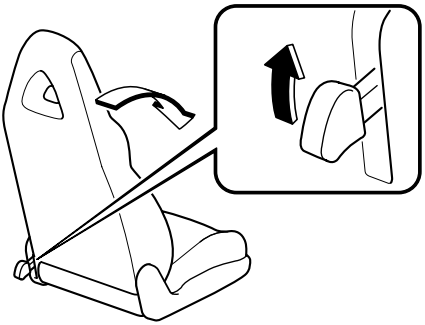

To return it to the upright position, lift the seatback and push it into place. Rock the seatback to make sure it is locked.

▼Seat Warmer

The front seats are electrically heated. The ignition switch must be in the ON position.

Press the switch to turn the seat warmer on or off. When the switch is in the ON position, the indicator light will come on.

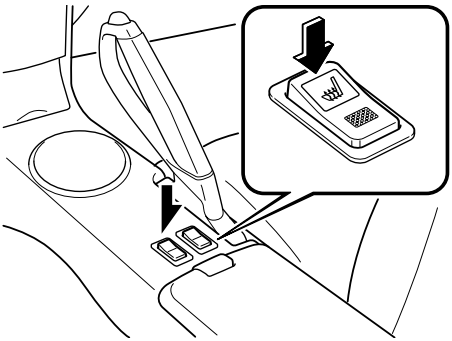

NOTE

The seat temperature is regulated automatically by a thermostat. Other than turning it on or off, it cannot be adjusted.

Rear Seat

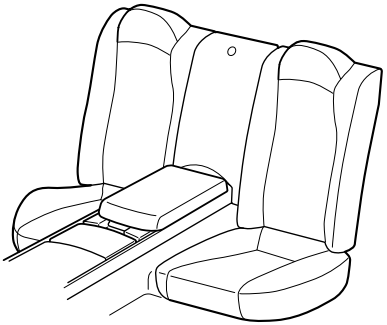

⚠ WARNING

Make sure luggage and cargo is secured before driving:

Not securing cargo while driving is dangerous as it could move or be crushed during sudden braking or a collision and cause injury.

Do not allow anyone to sit on the center console between the rear seats:

Allowing someone to sit on the rear center console between the rear seats is dangerous. The rear center console is not designed for occupant seating. During a collision, occupants not wearing a seat belt could be thrown from the vehicle and seriously injured or even killed.

Seat Belt Precautions

Seat belts help to decrease the possibility of severe injury during accidents and sudden stops. Mazda recommends that the driver and all passengers always wear seat belts.

All of the seat belt retractors are designed to keep the lap/shoulder belts out of the way when not in use.

The driver's seat belt has no provisions for child-restraint systems and has only an emergency locking mode. The driver may wear it comfortably, and it will lock during a collision.

However, the front passenger's seat and all rear lap/shoulder belt retractors operate in two modes: emergency locking mode, and for child-restraint systems, automatic locking mode. While we recommend you put all children in the rear seats, if you must use the front passenger seat for a child, slide the front passenger seat as far back as possible and make sure any child-restraint system is secured properly.

⚠ WARNING

Always wear your seat belt and make sure all occupants are properly restrained:
Not wearing a seat belt is extremely dangerous. During a collision, occupants not wearing seat belts could hit someone or things inside the vehicle or even be thrown out of the vehicle. They could be seriously injured or even killed. In the same collision, occupants wearing seat belts would be much safer.

Do not wear twisted seat belts:
Twisted seat belts are dangerous. In a collision, the full width of the belt is not available to absorb the impact. This puts more force on the bones beneath the belt, which could cause serious injury or death.

Never use one seat belt on more than one person at a time:
Using one seat belt for more than one person at a time is dangerous. A seat belt used in this way cannot spread the impact forces properly and the two passengers could be crushed together and seriously injured or even killed. Never use one belt for more than one person at a time and always operate the vehicle with each occupant properly restrained.

Do not operate a vehicle with a damaged seat belt:
Using a damaged seat belt is dangerous. An accident could damage the belt webbing of the seat belt in use. A damaged seat belt cannot provide adequate protection in a collision. Have an Authorized Mazda Dealer inspect all seat belt systems in use during an accident before they are used again.

Have your seat belts changed immediately if the pretensioner or load limiter has been expended:

One or both front air bags may deploy, and the corresponding pretensioner(s) may also deploy at the same time. While it is safer to use a crash-used seat belt that was used in an accident than no seat belt at all, using a seat belt with an expended pretensioner or load limiter loaded reduces the safety available to you. Like the air bags, the seat belt pretensioners will only function once. After they are expended, they will not function again and must be replaced immediately. If the seat belt pretensioners are not replaced, the risk of injury in a collision will increase. Always have an Authorized Mazda Dealer inspect the seat belt pretensioners and air bags after any collision. Expended seat belt pretensioners and air bags must be replaced after any collision which caused them to deploy. Additionally, the load limiter will only limit loads on the chest once in a collision and this is another reason to have the front seat belts inspected.

Make sure the seat belt is not caught or pinched in the door:

Wearing a seat belt that is caught or pinched in the door is dangerous. The seat belt could become loose and not provide adequate protection in a sudden stop or collision.

Make sure nothing is placed on the seat belt slide bar:

Placing your foot or other objects such as an umbrella on the seat belt slide bar is dangerous. The front seat belt is built into the rear door, and the lower part of the seat belt slides forward or backward along the seat belt slide bar as the rear door opens or closes. If the seat belt slider is blocked, the seat belt could be improperly positioned and would provide little or no protection in a collision.

⚠ CAUTION

Belt retraction may become difficult if the belts and rings are soiled, so try to keep them clean. For more details about cleaning the seat belts, refer to “Cleaning the Lap/Shoulder Belt Webbing” (page 8-45).

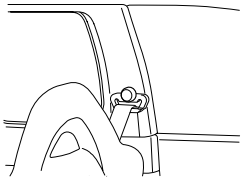

▼Pregnant Women and Persons with Serious Medical Conditions

Pregnant women should always wear seat belts. Ask your doctor for specific recommendations.
The lap belt should be worn SNUGLY AND AS LOW AS POSSIBLE OVER THE HIPS. The shoulder belt should be worn across your shoulder properly, but never across the stomach area.
Persons with serious medical conditions also should wear seat belts. Check with your doctor for any special instructions regarding specific medical conditions.

▼Emergency Locking Mode

In the emergency locking mode, the belt remains comfortable on the occupant and the retractor will lock in position during a collision. When the seat belt is fastened, it will always be in the emergency locking mode until it is switched to automatic locking mode by pulling it all the way out to its full length. If the belt feels tight and hinders comfortable movement while the vehicle is stopped or in motion, it may be in the automatic locking mode because the belt has been pulled too far out. To return to the belt to the more comfortable emergency locking mode, wait until the vehicle has stopped in a safe, level area, retract the belt fully to convert it back to emergency locking mode and then extend it around you again.

▼Automatic Locking Mode

Always use the automatic locking mode to keep the child-restraint system from shifting to an unsafe position in the event of an accident. To enable seat belt automatic locking mode, pull it all the way out and connect it as instructed on the child-restraint system. It will retract down to the child-restraint system and stay locked on it. See the section on child restraint (page 2-20).

Location of Seat Belt

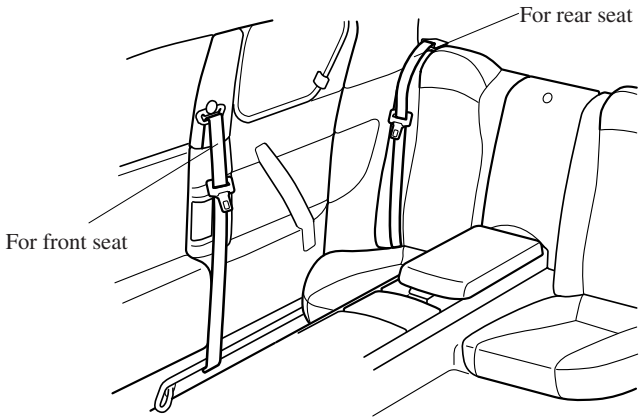

WARNING

Do not use a front seat belt while seated in a rear seat:

Using a front seat belt, which is stored in the rear door, is dangerous as the seat belt cannot function at its full capacity during sudden braking or in a collision, which could result in serious, injury or death. In addition, using the seat belt in this manner could damage the rear seat belt buckle.

Seat Belt

▼Fastening the Seat Belt

1. Grasp the tongue.
2. Slowly pull out the lap/shoulder belt.

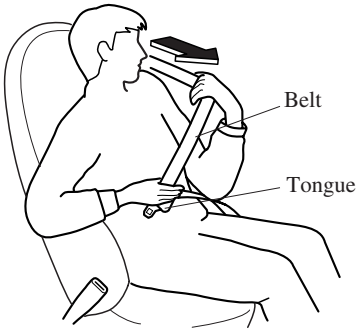

3. Insert the tongue into the buckle until you hear a click.

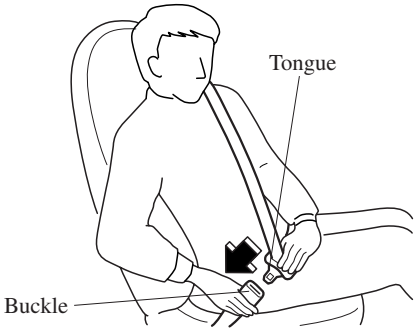

⚠ WARNING

Positioning the Shoulder Portion of the Seat Belt:

Improper positioning of the shoulder portion of the seat belt is dangerous. Always make sure the shoulder portion of the seat belt is positioned across your shoulder and near your neck, but never under your arm, on your neck, or on your upper arm.

4. Position the lap belt as low as possible, not on the abdominal area, then adjust the shoulder belt so that it fits snugly against your body.

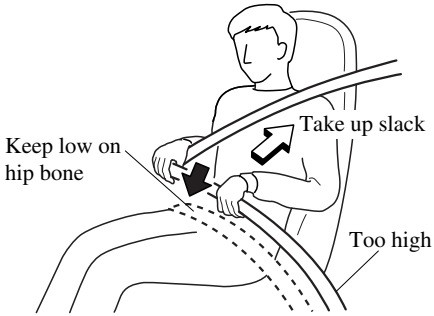

⚠ WARNING

Positioning the Lap Portion of the Seat Belt:

The lap portion of the seat belt worn too high is dangerous. In a collision, this would concentrate the impact force directly on the abdominal area, causing serious injury. Wear the lap portion of the belt snugly and as low as possible.

▼Unfastening the Seat Belt

Depress the button on the buckle. If the belt does not fully retract, pull it out and check for kinks or twists. Then make sure it remains untwisted as it retracts.

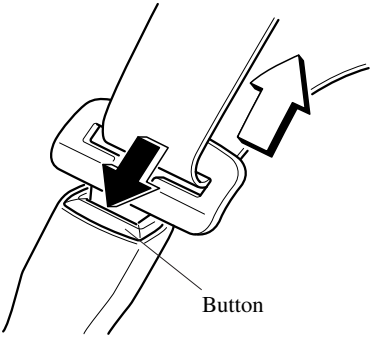

NOTE
If a belt does not fully retract, inspect it for kinks and twists. If it is still not retracting properly, have it inspected at an Authorized Mazda Dealer.

Front Seat Belt Pretensioner and Load Limiting Systems

For optimum protection, the driver and front passenger seat belts are equipped with pretensioner and load limiting systems. For both these systems to work properly you must wear the seat belt properly.

Pretensioners:
In moderate or severe frontal or near-frontal accidents, the front air bag and pretensioner systems deploy simultaneously. The front seat belt retractors remove slack quickly as the air bags are expanding.
In addition, the pretensioner system for the front passenger, like the front passenger air bag, is designed to only deploy in accordance with the total seated weight on the front passenger seat. Any time the air bags and seat belt pretensioners have fired they must be replaced. For details, refer to the front passenger seat weight sensors (page 2-40).

Load limiter:
The load limiting system releases belt webbing in a controlled manner to reduce belt force on the occupant's chest. While the most severe load on a seat belt occurs in frontal collisions, the load limiter has an automatic mechanical function and can activate in any accident mode with sufficient occupant movement.
Even if the pretensioners have not fired, the load limiting function must be checked by an Authorized Mazda Dealer.

WARNING

Wear seat belts only as recommended in this owner's manual:

Incorrect positioning of the driver and front passenger seat belts is dangerous. Without proper positioning, the pretensioner and load limiting systems cannot provide adequate protection in an accident and this could result in serious injury. For more details about wearing seat belts, refer to "Fastening the seat belts" (page 2-13).

Have your seat belts changed immediately if the pretensioner or load limiter has been expended:

One or both front air bags may deploy, and the corresponding pretensioner(s) may also deploy at the same time. While it is safer to use a crash-used seat belt that was used in an accident than no seat belt at all, using a seat belt with an expended pretensioner or load limiter loaded reduces the safety available to you. Like the air bags, the seat belt pretensioners will only function once. After they are expended, they will not function again and must be replaced immediately. If the seat belt pretensioners are not replaced, the risk of injury in a collision will increase. Always have an Authorized Mazda Dealer inspect the seat belt pretensioners and air bags after any collision. Expended seat belt pretensioners and air bags must be replaced after any collision which caused them to deploy. Additionally, the load limiter will only limit loads on the chest once in a collision and this is another reason to have the front seat belts inspected.

Do not modify the components or wiring, or use electronic testing devices on the pretensioner system:

Modifying the components or wiring of the pretensioner system, including the use of electronic testing devices is dangerous. You could accidentally activate it or make it inoperable which would prevent it from activating in an accident. The occupants or repairers could be seriously injured.

Properly dispose of the pretensioner system:

Improper disposal of the pretensioner system or a vehicle with non-deactivated pretensioners is dangerous. Unless all safety procedures are followed, injury could result. Ask an Authorized Mazda Dealer how to safely dispose of the pretensioner system or how to scrap a pretensioner-equipped vehicle.

NOTE

- *The pretensioner system will activate in a moderate or greater frontal or near-frontal collision. The pretensioner system for the front passenger is designed to only deploy in accordance with the total seated weight on the front passenger seat. It will not activate in most rollovers, side or rear impacts.*
- *Some smoke (non-toxic gas) will be released when the air bags and pretensioners deploy. This does not indicate a fire. This gas normally has no effect on occupants, however, those with sensitive skin may experience light skin irritation. If residue from the deployment of the air bags or the front pretensioner system gets on the skin or in the eyes, wash it off as soon as possible.*

▼Air Bag/Front Seat Belt Pretensioner System Warning Light

If the air bag/front seat belt pretensioner system is working properly, the warning light illuminates when the ignition switch is turned to the ON position or after the engine is cranked. The warning light turns off after a specified period of time.

A system malfunction is indicated if the warning light constantly flashes, constantly illuminates or does not illuminate at all when the ignition switch is turned to the ON position. If any of these occur, consult an Authorized Mazda Dealer as soon as possible. The system may not work in an accident.

⚠ WARNING

Never tamper with the air bag/ pretensioner systems and always have an Authorized Mazda Dealer perform all servicing and repairs:

Self-servicing or tampering with the systems is dangerous. An air bag/ pretensioner could accidentally activate or become disabled causing serious injury or death.

Seat Belt Extender

If your seat belt is not long enough, even when fully extended, a seat belt extender may be available to you at no charge from your Authorized Mazda Dealer.
This extender will be only for you and for the particular vehicle and seat. Even if it plugs into other seat belts, it may not hold in the critical moment of a crash.
When ordering an extender, only order one that provides the necessary additional length to fasten the seat belt properly.
Please contact your Authorized Mazda Dealer for more information.

WARNING

Do not use a seat belt extender unless it is necessary:

Using a seat belt extender when not necessary is dangerous. The seat belt will be too long and not fit properly. In an accident, the seat belt will not provide adequate protection and you could be seriously injured. Only use the extender when it is required to fasten the seat belt properly.

Do not use an improper extender:

Using a seat belt extender that is for another person or a different vehicle or seat is dangerous. The seat belt will not provide adequate protection and the user could be seriously injured in an accident. Only use the extender provided for you and for the particular vehicle and seat. NEVER use the extender in a different vehicle or seat.

Do not use an extender that is too long:

Using an extender that is too long is dangerous. The seat belt will not fit properly. In an accident, the seat belt will not provide adequate protection and you could be seriously injured. Do not use the extender or choose one shorter in length if the distance between the extender's buckle and the center of the user's body is less than 15cm (6 in).

NOTE
When not in use, remove the seat belt extender and store it in the vehicle. If the seat belt extender is left connected, the seat belt extender might get damaged as it will not retract with the rest of the seat belt and can easily fall out of the door when not in use and be damaged. In addition, the seat belt warning light will not illuminate and function properly.

Seat Belt Warning Light/Beep

The seat belt warning light illuminates and a beep sound will be heard if the driver's seat belt is not fastened when the ignition switch is turned to the ON position.

Conditions of operation

Condition	Result
The driver's seat belt is not fastened when the ignition switch is turned to the ON position.	The warning light flashes illuminates for about 1 minute and a beep sound will be heard for about 6 seconds.
The driver's seat belt is fastened while the warning light and the beep sound are activated.	The warning light turns off and the beep sound stops.
The driver's seat belt is fastened before the ignition switch is turned to the ON position.	The warning light will not illuminate and the beep sound will not be heard.

▼Belt Minder

NOTE
The belt minder can be deactivated. Consult an Authorized Mazda Dealer to deactivate and restore the seat belt minder.

The belt minder is a supplemental warning to the seat belt warning function. If the driver's seat belt is not fastened when the ignition switch is turned to the ON position, the warning light/beep operates to give you further reminders according to the chart below.

Condition	Vehicle speed			
	Between 0 — 20 km/h (0 — 12 mph)		20 km/h (12 mph) or more	
Seat belt	○	×	○	×
Indicator				
Beep				♪

○ : Fastened
× : Unfastened
: Illuminated
: Flashing
♪ : Beep

Once the beep sound is heard, it continues sounding even if the vehicle speed lowers to 20 km/h (12 mph) or less until the seatbelt is fastened or the beep sound period has passed.

Child Restraint Precautions

Mazda strongly urges the use of child-restraint systems for children small enough to use them.

You are required by law to use a child-restraint system for children in the U.S. and Canada. Check your local and state or provincial laws for specific requirements regarding the safety of children riding in your vehicle.

Whatever child-restraint system you consider, please pick the appropriate one for the age and size of the child, obey the law and follow the instructions that come with the individual child-restraint system.

A child who has outgrown child-restraint systems should sit in the rear and use seat belts, both lap and shoulder. If the shoulder belt crosses the neck or face, move the child closer to the center of the vehicle.

Statistics confirm that the rear seat is the best place for all children up to 12 years of age, and more so with a supplemental restraint system (air bags).

A rear-facing child-restraint system should **NEVER** be used on the front seat with the air bag system activated. The front passenger's seat is also the least preferred seat for other child-restraint systems.

To reduce the chance of injuries caused by deployment of the front passenger air bag, the front passenger seat weight sensors work as a part of the supplemental restraint system. This system deactivates the front passenger front and side air bags and also the front passenger seat belt pretensioner system when the total seated weight on the front passenger seat is less than approximately 30 kg (66 lb).

When an infant or small child sits on the front passenger seat, the system shuts off the front passenger front and side air bags and seat belt pretensioner system, so make sure the front passenger air bag deactivation indicator light illuminates.

Even if the front passenger air bag is shut off, Mazda strongly recommends that children be properly restrained and child-restraint systems of all kinds are properly secured on the rear seats which are the best place for children.

For more details, refer to “Front passenger seat weight sensors” (page 2-40).

WARNING

Use the correct size child-restraint system:

For effective protection in vehicle accidents and sudden stops, a child must be properly restrained using a seat belt or child-restraint system depending on age and size. If not, the child could be seriously injured or even killed in an accident.

Follow the manufacturer's instructions and always keep the child-restraint system buckled down:

An unsecured child-restraint system is dangerous. In a sudden stop or a collision it could move causing serious injury or death to the child or other occupants. Make sure any child-restraint system is properly secured in place according to the child-restraint system manufacturer's instructions. When not in use, remove it from the vehicle or fasten it with a seat belt, or latch it down to BOTH LATCH lower anchors for LATCH child-restraint systems and the corresponding tether anchor.

Always secure a child in a proper child-restraint system:

Holding a child in your arms while the vehicle is moving is extremely dangerous. No matter how strong the person may be, he or she cannot hold onto a child in a sudden stop or collision and it could result in serious injury or death to the child or other occupants. Even in a moderate accident, the child may be exposed to air bag forces that could result in serious injury or death to the child, or the child may be slammed into an adult, causing injury to both child and adult.

Never use a rear-facing child-restraint system in the front seat with an air bag that could deploy:

Rear-facing child-restraint systems on the front seat are particularly dangerous even though you may feel assured that a front passenger air bag will not deploy based on the fact that the front passenger air bag deactivation indicator light illuminates. The child-restraint system can be hit by a deploying air bag and moved violently backward resulting in serious injury or death to the child.

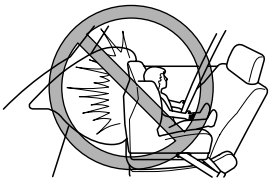

Do not install a front-facing child-restraint system on the front passenger seat unless it is unavoidable:

In a collision, the force of a deploying air bag could cause serious injury or death to the child. If installing a front-facing child-restraint system on the front passenger seat is unavoidable, move the front passenger seat as back as possible.

Seating a child in a child-restraint system on the front passenger seat is dangerous:

Vehicles equipped with front passenger seat weight sensors are also equipped with a front passenger air bag deactivation indicator light (page 2-27). Even with the front passenger seat weight sensors, if you must use the front passenger seat for children, seating a child in a child-restraint system on the front passenger seat under the following conditions increases the danger of the front passenger air bag deploying and could result in serious injury or death to the child.

- *The total seated weight of the child with the child-restraint system on the front passenger seat is approximately 30 kg (66 lb) or more with a child in the child-restraint system.*
- *Luggage or other items are placed on the seat with the child in the child-restraint system.*
- *A rear passenger or luggage push or pull down on the front passenger seatback.*
- *A rear passenger puts their feet on the front seat rails.*
- *Luggage or other items are placed on the seatback or hung on the head restraint.*
- *The seat is washed.*
- *Liquids are spilled on the seat.*
- *The front passenger seat is moved backward, pushing into luggage or other items placed behind it.*
- *The front passenger seatback contacts the rear seat.*
- *Luggage or other items are placed between the front passenger seat and driver seat.*
- *Any accessories, which might increase the total seated weight on the front passenger seat, are attached to the front passenger seat.*

The designated positions with seat belts on the rear seats are the safest places for children. Always use seat belts and child restraints.

Do not allow a child to lean over or against the side window of a vehicle with side and curtain air bags:

It is dangerous to allow anyone to lean over or against the side window, the area of the front passenger seat, the front and rear window pillars and the roof edge along both sides from which the side and curtain air bags deploy, even if a child-restraint system is used. If the vehicle is equipped with side and curtain air bags, the impact of inflation could cause serious injury or death to the child. Furthermore, leaning over or against the front door could block the side and curtain air bags and eliminate the advantages of supplemental protection. With the front air bag and the additional side air bag that comes out of the front seat, the rear seat is always a better location for children. Do not allow a child to lean over or against the side window, even if the child is seated in a child-restraint system.

Never use one seat belt on more than one person at a time:

Using one seat belt for more than one person at a time is dangerous. A seat belt used in this way cannot spread the impact forces properly and the two passengers could be crushed together and seriously injured or even killed. Never use one belt for more than one person at a time and always operate the vehicle with each occupant properly restrained.

⚠ CAUTION

A seat belt or child-restraint system can become very hot in a closed vehicle during warm weather. To avoid burning yourself or a child, check them before you or your child touches them.

NOTE

Your Mazda is equipped with LATCH lower anchors for attachment of specially designed LATCH child-restraint systems in the rear seat. When using these anchors to secure a child-restraint system, refer to “LATCH Child-Restraint Systems” (page 2-30).

Installing Child-Restraint Systems

Accident statistics reveal that a child is safer in the rear seat. The front passenger's seat is clearly the worst choice for any child under 12, and with rear-facing child-restraint systems it is clearly unsafe due to air bags.

Some child-restraint systems now come with tethers and therefore must be installed on the seats that take tethers to be effective. In your Mazda, tethered child-restraint systems can only be accommodated in the two positions on the rear seat.

Even if your vehicle is equipped with front passenger seat weight sensors (page 2-40), which automatically deactivates the front passenger air bag, a rear seat is the safest place for a child of any age or size.

Some child-restraint systems also employ specially designed LATCH attachments; refer to “LATCH Child-Restraint Systems” (page 2-30).

WARNING

Tethered Child-Restraint Systems Work Only on Tether-Equipped Rear Seats:

Installation of a tether equipped child-restraint system in the front passenger's seat defeats the safety design of the system and will result in an increased chance of serious injury if the child-restraint system goes forward without benefit of being tethered.

Place tether equipped child-restraint systems where there are tether anchors.

▼Rear Seat Child-Restraint System Installation

Follow these instructions when using a child-restraint system, unless you are attaching a LATCH-equipped child-restraint system to the rear LATCH lower anchors. Refer to “LATCH Child-Restraint Systems” (page 2-30).

NOTE

Follow the child-restraint system manufacturer's instructions carefully. If you are not sure whether you have a LATCH system or tether, check in the child-restraint system manufacturer's instructions and follow them accordingly. Depending on the type of child-restraint system, it may not employ seat belts which are in automatic locking mode.

1. Secure the child-restraint system with the lap portion of the lap/shoulder belt. See the manufacturer's instructions on the child-restraint system for belt routing instructions.
2. To get the retractor into the automatic locking mode, pull the shoulder belt portion of the seat belt until the entire length of the belt is out of the retractor.

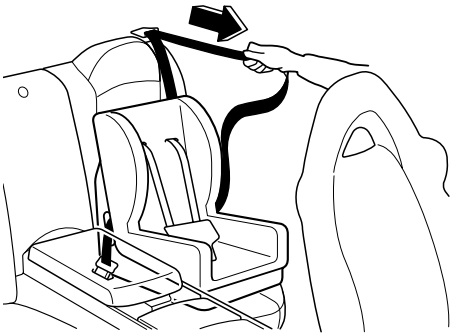

3. Push the child-restraint system firmly into the vehicle seat. Be sure the belt retracts as snugly as possible. Clicking from the retractor will be heard during retraction if the system is in the automatic locking mode. If the belt does not lock the seat down tight, repeat this step.

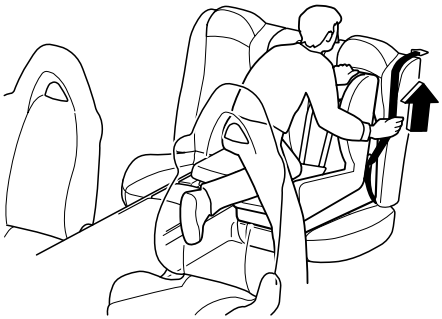

NOTE
Inspect this function before each use of the child-restraint system. You should not be able to pull the shoulder belt out of the retractor while the system is in the automatic locking mode. When you remove the child-restraint system, be sure the belt fully retracts to return the system to emergency locking mode before occupants use the seat belts.

4. If your child-restraint system requires the use of a tether strap, refer to the manufacturer's instructions to hook and tighten the tether strap after raising the head restraint.

Anchor bracket location

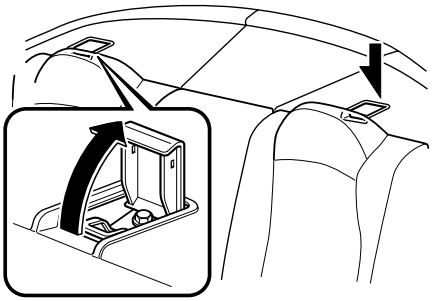

Tether strap position

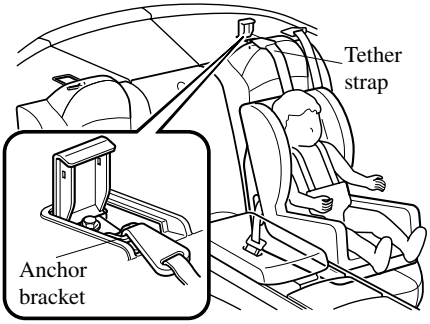

WARNING

Use the tether and tether anchor only for a child-restraint system:

Using the tether or tether anchor to secure anything but a child-restraint system is dangerous. This could weaken or damage the tether or tether anchor and result in injury.

Always attach the tether strap to the correct tether anchor position:

Attaching the tether strap to the incorrect tether anchor position is dangerous. In a collision, the tether strap could come off and loosen the child-restraint system. If the child-restraint system moves it could result in death or injury to the child.

▼If You Must Use the Front Seat for Children

If you cannot put all children in the rear seat, at least put the smallest children in the rear and be sure the largest child up front uses the shoulder belt over the shoulder.
NEVER put a rear-facing child-restraint system on the front passenger seat, even with a seat weight sensor equipped vehicle.
This seat is also not set up for tethered child-restraint systems, put them in one of the rear seat positions set up with tether anchors.
Likewise the LATCH child-restraint system cannot be secured in the front passenger's seat and should be used in the rear seat.
Don't allow anyone to sleep against the side window if you have an optional side and curtain air bag, it could cause serious injuries to an out of position occupant. As children more often sleep in cars, it is better to put them in the rear seat. If installing the child-restraint system on the front seat is unavoidable, follow these instructions when using a front-facing child-restraint system in the front passenger's seat.

NOTE

- *To check if your front seats have side air bags:*
  Mazda vehicles equipped with side air bag will have a “SRS AIRBAG” tag on the outboard shoulder of the front seats.
- *To check if your vehicle has curtain air bags:*
  Mazda vehicles equipped with curtain air bag will have an “SRS AIRBAG” marking on the window pillars along the roof edge.

WARNING

Always move the front passenger seat as far back as possible if installing a front-facing child-restraint system on it is unavoidable:

As your vehicle has front air bags and doubly so if your vehicle has side air bags, a front-facing child-restraint system should be put on the front passenger seat only when it is unavoidable.
Even if the front passenger air bag deactivation indicator light illuminates, always move the seat as far back as possible, because the force of a deploying air bag could cause serious injury or death to the child.
Always move the seat as far back as possible, because the force of a deploying air bag could cause serious injury or death to the child.

Never use a rear-facing child-restraint system in the front seat with an air bag that could deploy:

Rear-facing child-restraint systems on the front seat are particularly dangerous.
Even in a moderate collision, the child-restraint system can be hit by a deploying air bag and moved violently backward resulting in serious injury or death to the child.

Do not allow a child to lean over or against the side window of a vehicle with side and curtain air bags:

It is dangerous to allow anyone to lean over or against the side window, the area of the front passenger seat, the front and rear window pillars and the roof edge along both sides from which the side and curtain air bags deploy, even if a child-restraint system is used. If the vehicle is equipped with side and curtain air bags, the impact of inflation could cause serious injury or death to the child. Furthermore, leaning over or against the front door could block the side and curtain air bags and eliminate the advantages of supplemental protection. With the front air bag and the additional side air bag that comes out of the front seat, the rear seat is always a better location for children. Do not allow a child to lean over or against the side window, even if the child is seated in a child-restraint system.

▼Front Passenger's Seat Child-Restraint System Installation

1. Slide the seat as far back as possible.

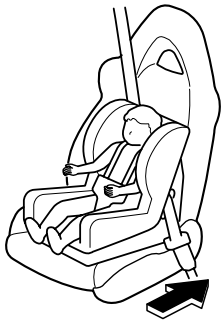

2. Secure the child-restraint system with the lap portion of the lap/shoulder belt. See the manufacturer's instructions on the child-restraint system for belt routing instructions.
3. To get the retractor into the automatic locking mode, pull the shoulder belt portion of the seat belt until the entire length of the belt is out of the retractor.
4. Push the child-restraint system firmly into the vehicle seat. Be sure the belt retracts as snugly as possible. Clicking from the retractor will be heard during retraction if the system is in automatic locking mode. If the belt does not lock the seat down tight, repeat the previous step and also this one.

NOTE

- *Inspect this function before each use of the child-restraint system. You should not be able to pull the shoulder belt out of the retractor while the system is in the automatic locking mode. When you remove the child-restraint system, be sure the belt fully retracts to return the system to emergency locking mode before occupants use the seat belts.*
- *Follow the child-restraint system manufacturer's instructions carefully. Depending on the type of child-restraint system, it may not employ seat belts which are in automatic locking mode.*

5. Make sure the front passenger air bag deactivation indicator light illuminates after installing a child-restraint system on the front passenger seat.
   Refer to Front passenger air bag deactivation indicator light on page 2-40.

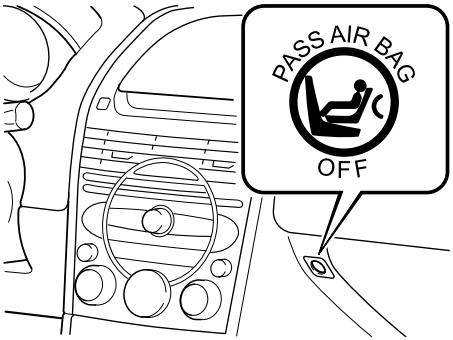

WARNING

Do not seat a child in a child-restraint system on the front passenger seat if the front passenger air bag deactivation indicator light does not illuminated:

While it is always better to install any child-restraint system on the rear seat, it is imperative that a child-restraint system ***ONLY*** *be used on the front passenger seat if the deactivation indicator light illuminates when the child is seated in the child-restraint system (page 2-40). Seating a child in a child-restraint system installed on the front passenger seat with the front passenger air bag deactivation indicator light not illuminated is dangerous. If this indicator light does not illuminate even when the total seated weight is less than approximately 30 kg (66 lb), this means that the front passenger front and side air bags, and seat belt pretensioner are ready for deployment. If an accident were to deploy an air bag, a child in a child-restraint system sitting in the front passenger seat could be seriously injured or killed. If the indicator light does not illuminate after seating a child in a child-restraint system on the front passenger seat, seat a child in a child-restraint system on the rear seat and consult an Authorized Mazda Dealer as soon as possible.*

LATCH Child-Restraint Systems

Your Mazda is equipped with LATCH lower anchors for attachment of specially designed LATCH child-restraint systems in the rear seat. Both anchors must be used, otherwise the seat will bounce around and put the child in danger. Most LATCH child-restraint systems must also be used in conjunction with a tether to be effective. If they have a tether you must use it to better assure your child's safety.

WARNING

Follow the manufacturer's instructions for the use of the child-restraint system:

An unsecured child-restraint system is dangerous. In a sudden stop or a collision it could move causing serious injury or death to the child or other occupants. Make sure the child-restraint system is properly secured in place according to the child-restraint system manufacturer's instructions.

Make sure the child-restraint system is properly secured:

An unsecured child-restraint system is dangerous. In a sudden stop or a collision it could move causing serious injury or death to the child or other occupants. Follow the child-restraint system manufacturer's instructions on belt routing to secure the seat just as you would with a child in it so that nobody is tempted to put a child in an improperly secured seat later on. When not in use, remove it from the vehicle or fasten it with a seat belt, or latch it down to BOTH LATCH lower anchors for LATCH child-restraint systems.

Make sure there are no seat belts or foreign objects near or around the LATCH child-restraint system:

Not following the child-restraint system manufacturer's instructions when installing the child-restraint system is dangerous. If seat belts or a foreign object prevent the child-restraint system from being securely attached to the LATCH lower anchors and the child-restraint system is installed improperly, the child-restraint system could move in a sudden stop or collision causing serious injury or death to the child or other occupants. When installing the child-restraint system, make sure there are no seat belts or foreign objects near or around the LATCH lower anchors. Always follow the child-restraint system manufacturer's instructions.

▼LATCH Child-Restraint System Installation Procedure (Rear Seats)

1. Expand the open seams on the rear of the seat bottom slightly to verify the locations of the LATCH lower anchors.

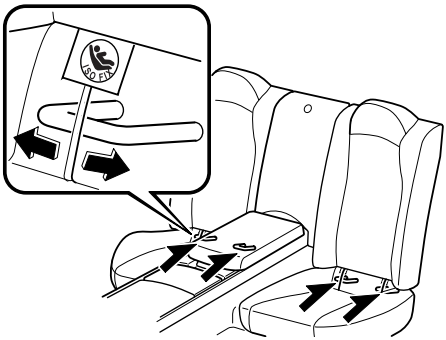

NOTE

The markings above the LATCH lower anchors indicate the locations of LATCH lower anchors for the attachment of a child-restraint system.

2. Secure the child-restraint system using BOTH LATCH lower anchors, following the child-restraint system manufacturer's instruction.
3. If your child-restraint system came equipped with a tether, that probably means it is very important to properly secure the tether for child safety. Please carefully follow the child-restraint system manufacturer's instructions when installing tethers.

Anchor bracket location

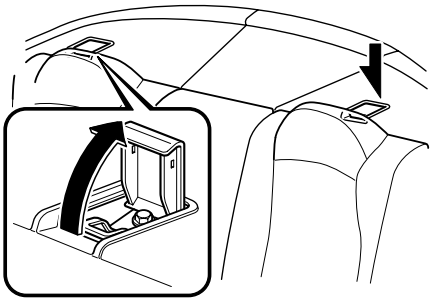

Tether strap position

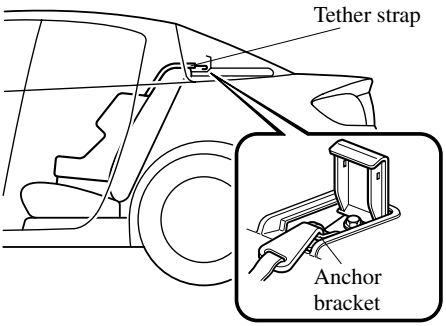

WARNING

Use the tether and tether anchor only for a child-restraint system:

Using the tether or tether anchor to secure anything but a child-restraint system is dangerous. This could weaken or damage the tether or tether anchor and result in injury.

Always attach the tether strap to the correct tether anchor position:

Attaching the tether strap to the incorrect tether anchor position is dangerous. In a collision, the tether strap could come off and loosen the child-restraint system. If the child-restraint system moves it could result in death or injury to the child.

Supplemental Restraint Systems (SRS) Precautions

The front and side supplemental restraint systems (SRS) include up to 6 air bags. **Please verify which kinds of air bags are equipped on your vehicle by locating the "SRS AIRBAG" location indicators.** These indicators are visible in the area where the air bags are installed.
The air bags are installed in the following locations:

- The steering wheel hub (driver air bag)
- The front passenger dashboard (front passenger air bag)
- The outboard sides of the front seatbacks (side air bags)
- The front and rear window pillars, and the roof edge along both sides (curtain air bags)

These systems operate independently depending on the type of accident encountered; if you have side and curtain air bags, the side and curtain air bags are not likely to deploy on both sides in the same accident because a vehicle is not often hit from both sides. The side and curtain air bags and the frontal air bag system will not normally deploy during the same type of accident unless a combination of frontal and side impacts occur.

The air bag supplemental restraint systems are designed to provide supplemental protection only in the front seats in certain situations and the rear outside passenger positions only in same-side collisions, so seat belts are always important in the following ways:

Without seat belt usage, the air bags cannot provide adequate protection during an accident. Seat belt usage is necessary to:
- Keep the occupant from being thrown into an inflating air bag.
- Reduce the possibility of injuries during an accident that is not designed for air bag inflation, such as roll-over or rear impact.
- Reduce the possibility of injuries in frontal or side collisions that are not severe enough to activate the air bags.
- Reduce the possibility of being thrown from your vehicle.
- Reduce the possibility of injuries to lower body and legs during an accident because the air bags provide no protection to these parts of the body.
- Hold the driver in a position which allows better control of the vehicle.

Small children must be protected by a child-restraint system as stipulated by law in every state and province. In certain states and provinces, larger children must use a child-restraint system (page 2-20).
Carefully consider which child-restraint system is necessary for your child and follow the installation directions in this Owner's Manual as well as the child-restraint system manufacturer's instructions.

WARNING

Seat belts must be worn in air bag equipped vehicles:

Depending only on the air bags for protection during an accident is dangerous. Alone, air bags may not prevent serious injuries. The appropriate air bags can be expected to inflate only in the first collision with frontal, near frontal or side forces that are at least moderate. Vehicle occupants should always wear seat belts.

Children should not ride in the front passenger seat:

Placing a child, 12 years or under, in the front seat is dangerous. The child could be hit by a deploying air bag and be seriously injured or even killed. Even if the front passenger air bag deactivation indicator light illuminates, always move the front passenger seat as far back as possible. A sleeping child is more likely to lean against the door and be hit by the side air bag in a moderate, right-side collision. Whenever possible, always secure a child 12 years and under on the rear seat with an appropriate child-restraint system for the child's age and size.

Never use a rear-facing child-restraint system in the front seat with an air bag that could deploy:

Rear-facing child-restraint systems on the front seat are particularly dangerous even though you may feel assured that a front passenger air bag will not deploy based on the fact that the front passenger air bag deactivation indicator light illuminates. The child-restraint system can be hit by a deploying air bag and moved violently backward resulting in serious injury or death to the child.

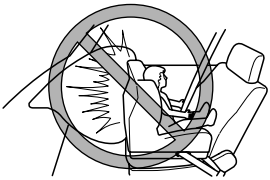

Do not sit too close to the driver and front passenger air bags:

Sitting too close to the driver and front passenger air bag modules or placing hands or feet on them is extremely dangerous. The driver and front passenger air bags inflate with great force and speed. Serious injuries could occur if someone is too close. The driver should always hold onto only the rim of the steering wheel. The front seat passenger should keep both feet on the floor. Front seat occupants should adjust their seats as far back as possible and always sit upright against the seatbacks with seat belts worn properly.

Sit in the center of the seat and wear seat belts properly:

Sitting too close to the side air bag modules or placing hands on them is extremely dangerous. The side air bags inflate with great force and speed directly out of the outboard side of the front seat and expand along the front door on the side the car is hit. Serious injury could occur if someone is sitting too close to the door or leaning against a window, or if rear seat occupants grab the sides of the front seatbacks. Furthermore, sleeping up against the door or hanging out the windows in the vehicle could block the side and curtain air bags and eliminate the advantages of supplemental protection. Give the side and curtain air bags room to work by sitting in the center of the seat while the vehicle is moving with seat belts worn properly.

Do not attach objects on or around the area where driver and front passenger air bags deploy:

Attaching an object to the driver and front passenger air bag modules or placing something in front of them is dangerous. In an accident, an object could interfere with air bag inflation and injure the occupants.

Do not attach objects on or around the area where a side air bag deploys:

Attaching things to the front seat in such a way as to cover the outboard side of the seat in any way is dangerous. In an accident the object could interfere with the side air bag, which inflates from the outboard side of the front seats, impeding the added protection of the side air bag system or redirecting the air bag in a way that is dangerous. Furthermore, the bag could be cut open releasing the gas.

Do not hang net bags, map pouches or backpacks with side straps on the front seats. Never use seat covers on the front seats. Always keep the side air bag modules in your front seats free to deploy in the event of a side collision.

Do not attach objects on or around the area where a curtain air bag deploys:

Attaching objects to the areas where the curtain air bag activates such as on the windshield glass, side door glass, front and rear window pillars and along the roof edge and assist grips is dangerous. In an accident the object could interfere with the curtain air bag, which inflates from the front and rear window pillars and along the roof edge, impeding the added protection of the curtain air bag system or redirecting the air bag in a way that is dangerous. Furthermore, the bag could be cut open releasing the gas.

Do not place hangers or any other objects on the assist grips. When hanging clothes, hang them on the coat hook directly. Always keep the curtain air bag modules free to deploy in the event of a side collision.

Do not place luggage or other objects under the front seats:

Placing luggage or other objects under the front seats is dangerous. The components essential to the supplemental restraint system could be damaged, and in the event of a side collision, the appropriate air bags may not deploy, which could result in death or serious injury. To prevent damage to the components essential to the supplemental restraint system, do not place luggage or other objects under the front seats.

Do not touch the components of the supplemental restraint system after the air bags have inflated:

Touching the components of the supplemental restraint system after the air bags have inflated is dangerous. Immediately after inflation, they are very hot. You could get burned.

Never install any front-end equipment to your vehicle:

Installation of front-end equipment, such as frontal protection bar (kangaroo bar, bull bar, push bar, or other similar devices), snowplow, or winches, is dangerous. The air bag crash sensor system could be affected. This could cause air bags to inflate unexpectedly, or it could prevent the air bags from inflating during an accident. Front occupants could be seriously injured.

Do not modify the suspension:

Modifying the vehicle suspension is dangerous. If the vehicle's height or the suspension is modified, the vehicle will be unable to accurately detect a collision resulting in incorrect or unexpected air bag deployment and the possibility of serious injuries.

Do not modify the supplemental restraint system:

Modifying the components or wiring of the supplemental restraint system is dangerous. You could accidentally activate it or make it inoperable. Do not make any modifications to the supplemental restraint system. This includes installing trim, badges, or anything else over the air bag modules. It also includes installing extra electrical equipment on or near system components or wiring. An Authorized Mazda Dealer can provide the special care needed in the removal and installation of front seats. It is important to protect the air bag wiring and connections to assure that the bags do not accidentally deploy, the driver seat slide position sensor and front passenger seat weight sensors are not damaged and that the seats retain an undamaged air bag connection.

NOTE

- *When an air bag deploys, a loud inflation noise can be heard and some smoke will be released. Neither is likely to cause injury, however, the texture of the air bags may cause light skin injuries on body parts not covered with clothing through friction.*
- *Should you sell your Mazda, we urge you to tell the new owner of its air bag systems and that familiarization with all instructions about them, from the Owner's Manual, is important.*

Supplemental Restraint System Components

The supplemental restraint systems (SRS) have two basic subsystems:
- The air bag system with inflators and air bags.
- The electrical system with crash sensors and diagnostic module.

The air bags are mounted in the following locations:
- The steering wheel hub
- The front passenger dashboard
- The outboard sides of the front seatbacks
- The front and rear window pillars, and the roof edge along both sides

The air bags are out of sight until activated.

▼Front Air Bag System Components

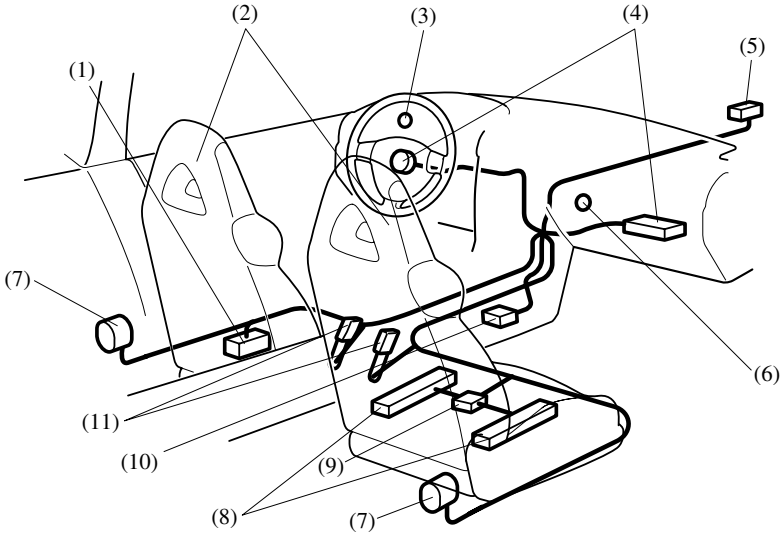

(1) Driver seat slide position sensor (page 2-40)
(2) Front seats
(3) Air bag/front seat belt pretensioner system warning light (page 2-49)
(4) Front dual stage inflators and air bags
(5) Front air bag sensor
(6) Front passenger air bag deactivation indicator light (page 2-40)
(7) Front seat belt pretensioner and load limiting systems (page 2-14)
(8) Front passenger seat weight sensors (page 2-40)
(9) Front passenger seat weight sensor control module
(10) Crash sensors and diagnostic module (SAS unit)
(11) Driver and front passenger seat belt buckle switches (page 2-40)

▼Side and Curtain Air Bag System Components

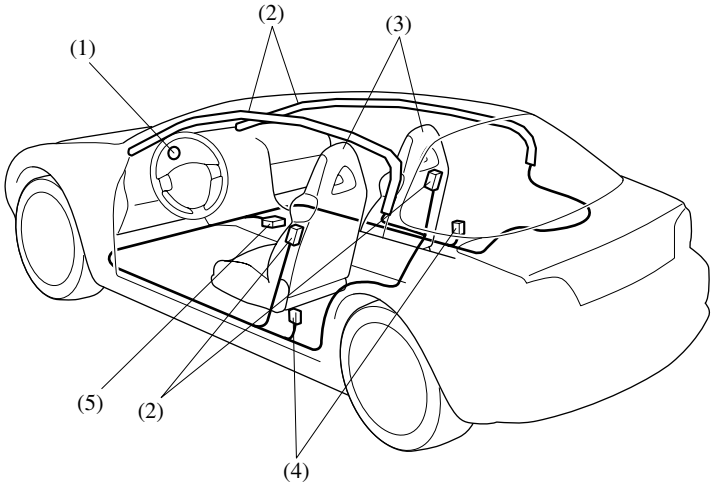

(1) Air bag/front seat belt pretensioner system warning light (page 2-49)
(2) Side and curtain inflators and air bags
(3) Front seats
(4) Side crash sensor
(5) Crash sensors and diagnostic module (SAS unit)

How the Air Bags Work

▼How the Front Air Bags Work

When air bag crash sensors detect a frontal impact of greater than moderate force, an electrical current is sent to the inflators.
Gases are produced to inflate the front air bags and after the inflation, the front air bags quickly deflate.
The front air bags will function only once. After that, **the front air bags will not work again and must be replaced.**
Only an Authorized Mazda Dealer can replace the system components.

The front, dual stage air bags control air bag inflation in two energy stages. During an impact of moderate severity the front air bags deploy with lesser energy, whereas during more severe impacts, they deploy with more energy. Deployment of the front air bags may differ between the driver and the front passenger depending on the driver seat position, front passenger weight and front seat belt usage, all of which provide data from each sensor to the air bag system.

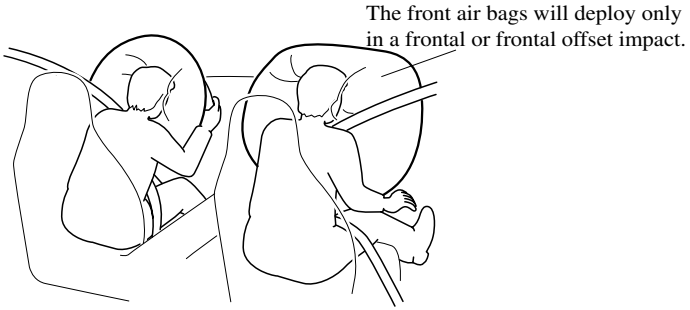

Driver seat slide position sensor

Your vehicle is equipped with a driver seat slide position sensor as a part of the supplemental restraint system. The sensor is located under the driver seat. The sensor determines whether the driver seat is fore or aft of a reference position and sends the seat position to the diagnostic module (SAS unit). The SAS unit is also designed to control the deployment of the driver air bag depending on how close the driver seat is to the steering wheel.

The air bag/front seat belt pretensioner system warning light flashes if the sensor has a possible malfunction (page 2-49).

Front passenger seat weight sensors

Your vehicle is equipped with the front passenger seat weight sensors (page 2-27). These sensors are located under both of the front passenger seat rails. These sensors determine the total seated weight on the front passenger seat. The SAS unit is designed to prevent the front passenger front and side air bags and seat belt pretensioner system from deploying if the total seated weight is less than approximately 30 kg (66 lb).

To reduce the chance of injuries caused by deployment of the front passenger air bag, the system deactivates the front passenger front and side air bags and also the seat belt pretensioner system when:

- There is no passenger in the front passenger seat. (The front passenger air bag deactivation indicator light does not illuminate.)
- The total seated weight on the front passenger seat is less than approximately 30 kg (66 lb). (The front passenger air bag deactivation indicator light illuminates.)

This system shuts off the front passenger front and side air bags and seat belt pretensioner system, so make sure the front passenger air bag deactivation indicator light illuminates according to the following table.

The air bag/front seat belt pretensioner system warning light flashes and the front passenger air bag deactivation indicator light illuminates if the sensors have a possible malfunction. If this happens, the front passenger front and side air bags and seat belt pretensioner system will not deploy.

Front passenger air bag deactivation indicator light

This indicator light illuminates to remind you that the front passenger front and side air bags and seat belt pretensioner will not deploy during a collision.

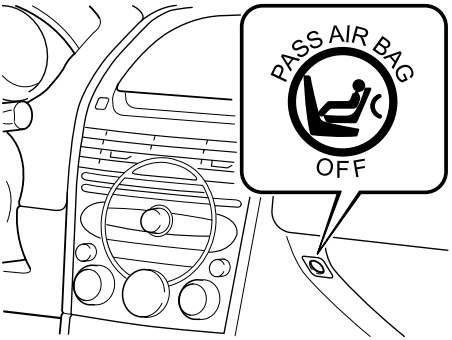

If the front passenger weight sensors are working properly, the indicator light illuminates when the ignition switch is turned to the ON position. After a specified period of time it goes out.

The front passenger air bag deactivation indicator light illuminates or is off under the following conditions:

Total seated weight on the front passenger seat	Front passenger air bag deactivation indicator light	Front passenger front and side air bags	Front passenger seat belt pretensioner system
Empty (Not occupied)*	OFF	Deactivated	Deactivated
Less than approx.30kg (661b)	ON	Deactivated	Deactivated
Approx.42 kg (931b) or more	OFF	Ready	Ready

* If the front passenger seat belt is buckled, the front passenger air bag deactivation indicator light illuminates, however this does not indicate a malfunction.

Curtain air bag is ready for inflating despite the chart above.
If the front passenger air bag deactivation indicator light does not illuminate when the ignition switch is turned to the ON position and does not illuminate as indicated in the above chart, do not allow a child to sit in the front passenger seat and consult an Authorized Mazda Dealer as soon as possible. The system may not work properly in an accident.

WARNING

Do not decrease the total seated weight on the front passenger seat:

When an adult or large child sits on the front passenger seat, decreasing the total seated weight on the front passenger seat from the total seated weight of approximately 42 kg (93 lb) required for air bag deployment is dangerous. The front passenger seat weight sensors will detect the reduced total seated weight condition and the front passenger front and side air bags and seat belt pretensioner system will not deploy during an accident. The front passenger will not have the supplementary protection of the air bag, which could result in serious injury.

Decreasing the total seated weight on the front passenger seat from the total seated weight of approximately 42 kg (93 lb) could result in an air bag not deploying under the following conditions, for example:

- *A rear passenger pushes up on the front passenger seat with the feet.*
- *Luggage or other items placed under the front passenger seat or between the front passenger seat and driver seat that push up the front passenger seat bottom.*
- *The front passenger seat occupant sits in a manner that does not place the entire weight of the occupant on the seat such as by sitting too close to the door, grasping the assist grip or the rim of the moonroof and sitting with the seatback reclined too far.*
- *Any accessories which might decrease the total seated weight on the front passenger seat are attached to the front passenger seat.*
- *Tension in the upward direction is placed on the seat belt slide bar such as by pulling up on the seat belt.*

The front passenger front and side air bags and seat belt pretensioner systems will deactivate if the total seated weight on the front passenger seat is close to 30 kg (66 lb) and they will reactivate before the weight exceeds 42 kg (93 lb).

Do not increase the total seated weight on the front passenger seat:

When an infant or small child sits on the front passenger seat, increasing the total seated weight on the front passenger seat from the total seated weight of approximately 30 kg (66 lb) is dangerous. The front passenger seat weight sensors will detect the increased total seated weight, which could result in the unexpected deployment of the front passenger front and side air bags and seat belt pretensioner system in an accident and may cause serious injury. Increasing the total seated weight on the front passenger seat beyond the total seated weight of approximately 30 kg (66 lb) could result in the front passenger front and side air bags and seat belt pretensioner system deployment in an accident under the following conditions, for example:

- *Luggage or other items are placed on the seat with the child in the child-restraint system.*
- *A rear passenger or luggage push or pull down on the front passenger seatback.*
- *A rear passenger steps on the front passenger seat rails with the feet.*
- *Luggage or other items are placed on the seatback or hung on the head restraint.*
- *The seat is washed.*
- *Liquids are spilled on the seat.*
- *The front passenger seat is moved backward, pushing into luggage or other items placed behind it.*
- *The front passenger seatback contacts the rear seat.*
- *Luggage or other items are placed between the front passenger seat and driver seat.*
- *Any accessories which might increase the total seated weight on the front passenger seat are attached to the front passenger seat.*
- *Feet or other items are placed on the seat belt slide bar.*

The front passenger front and side air bags and seat belt pretensioner systems will deactivate if the total seated weight on the front passenger seat is less than approximately 30 kg (66 lb) and they will reactivate when the weight exceeds approximately 42 kg (93 lb).

⚠ CAUTION

- *To assure proper deployment of the front air bag and to prevent damage to the sensors in the front seat bottoms:*
  - *Do not place sharp objects on the front seat bottoms or leave heavy luggage on them.*
  - *Do not spill any liquids on the front seats or under the front seats.*
- *To allow the sensors to function properly, always perform the following:*
  - *Adjust the front seats as far back as possible and always sit upright against the seatbacks with seat belts worn properly.*
  - *If you place your child on the front passenger seat, secure the child-restraint system properly and slide the front passenger seat as far back as possible (page 2-27).*

NOTE

- *The system requires about 10 seconds to alternate between turning the front passenger front and side air bags and seat belt pretensioner system on or off.*
- *The front passenger air bag deactivation indicator light may illuminate repeatedly if luggage or other items are put on the front passenger seat, or if the temperature of the vehicle's interior changes suddenly.*
- *The front passenger air bag deactivation indicator light may illuminate for 10 seconds if the total seated weight on the front passenger seat changes.*
- *If the front passenger air bag deactivation indicator light does not illuminate after installing a child-restraint system on the front passenger seat, install the child-restraint system on the rear seat and consult an Authorized Mazda Dealer as soon as possible.*

Driver and front passenger buckle switches

The buckle switches on the front seat belts detect whether or not the front seat belts are securely fastened and further control the deployment of the air bags.

▼How the Side and Curtain Air Bags Work

When air bag crash sensors detect a side impact of greater than moderate force, an electrical current is sent to the inflators.
Gases are produced to inflate the side and curtain air bags and after the inflation, the side and curtain air bags quickly deflate. However, the side air bag system for the front passenger is designed to only deploy in accordance with the total seated weight on the front passenger seat.
The side and curtain air bags will function only once. After that, **the side and curtain air bags will not work again and must be replaced.** Only an Authorized Mazda Dealer can replace the systems.

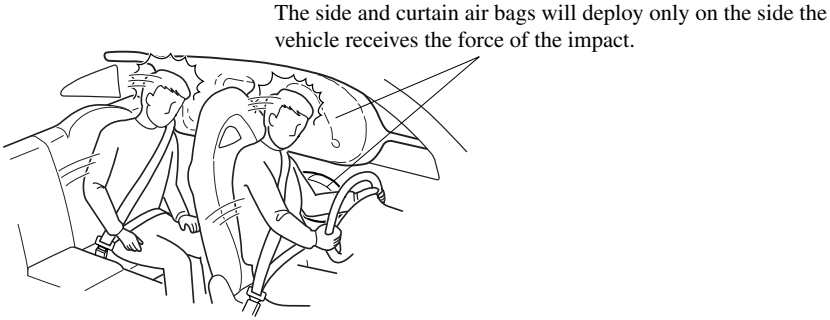

▼Air Bag Activation/Deactivation

NOTE

If the front passenger seat weight sensors detect a total seated weight on the front passenger seat is less than approximately 42 kg (93 lb), the front passenger front and side air bags and seat belt pretensioner may not deploy (page 2-40), but the curtain air bags may deploy.

Front air bag activation

The front air bags will inflate if the severity of impact is above the designed threshold level.

- Hitting a solid wall straight on at greater than about 22 km/h (14 mph).

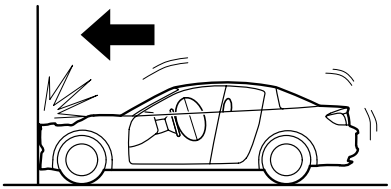

- Hitting a curb, pavement edge or hard object.

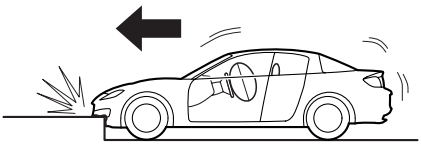

- Landing hard or the vehicle falling.

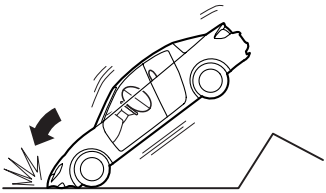

- Frontal impact within about a 30 degree range from head-on to the vehicle.

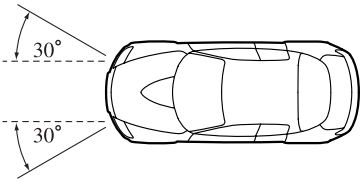

- Driving into a big hole or hitting the far side of a hole.

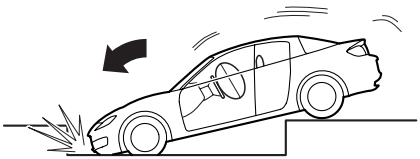

Limitations to front air bag activation

Depending on the severity of impact, the front air bags may not inflate in the following cases:

- Impacts involving trees or poles cause severe cosmetic damage but may not have enough stopping force to activate the air bag.

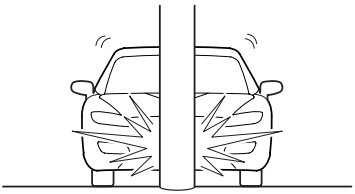

- Frontal offset impact to the vehicle may not provide the stopping force necessary for air bag deployment.

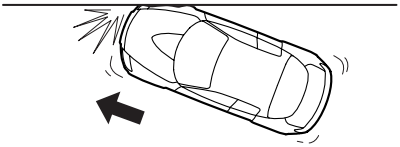

- Rear-ending or running under a truck's tail gate may not provide the stopping force necessary for air bag deployment.

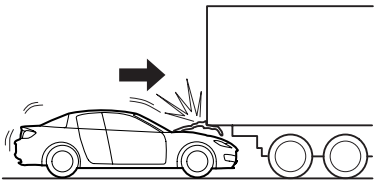

Non-activation of front air bags

Front air bags will not normally inflate in the following cases:

- Collision from the rear.

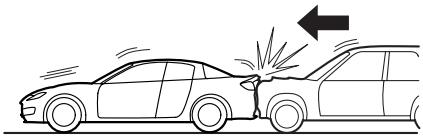

- Impact to the side, but it may deploy the side and curtain air bags.

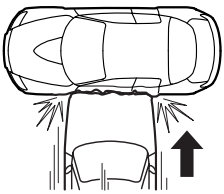

- Vehicle roll-over, may deploy the side and curtain air bags but not the front air bags.

Side and curtain air bag activation

The severity of impact above the designed threshold level to one side of the vehicle (driver or passenger side areas) will cause the side and curtain air bags on that side to inflate, but it will not normally deploy the front air bags.

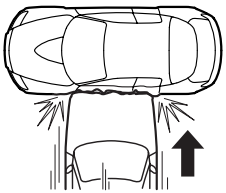

Limitations to side and curtain air bag activation

Depending on the severity of impact, the side and curtain air bags may not inflate in the following cases:

- Frontal offset impact may not provide enough side impact to deploy the side and curtain air bags.

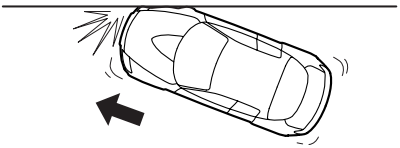

- Side impacts involving trees or poles can cause severe cosmetic damage but may not have enough impact force to activate the side and curtain air bags.

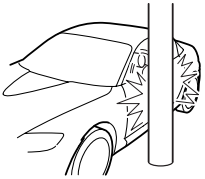

- Vehicle roll-over may not provide enough side force to deploy the side and curtain air bags.

- Side impacts with two-wheeled vehicles may not provide enough force to deploy the side and curtain air bags.

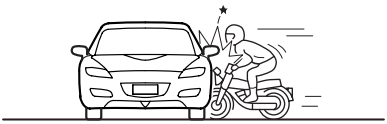

Non-activation of side and curtain air bag

The side and curtain air bags will not normally inflate in the following cases:

- Collision from the rear.

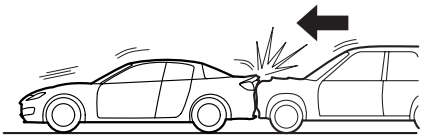

- Collision from the front, but it may deploy the front air bags.

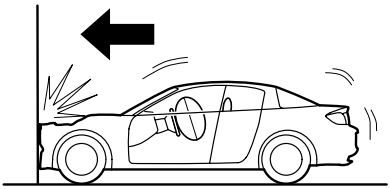

▼Constant Monitoring

The following components of the air bag systems are monitored by a diagnostic system:

- SAS unit
- Front air bag sensor
- Air bag modules
- Side crash sensors
- Air bag/Front seat belt pretensioner system warning light
- Front seat belt pretensioners
- Front passenger air bag deactivation indicator light
- Related wiring
- Driver seat slide position sensor
- Front passenger seat weight sensors
- Driver and front passenger seat belt buckle switches

The diagnostic module continuously monitors the system's readiness. This begins when the ignition switch is turned to the ON position and continues while the vehicle is being driven.

▼Air Bag/Front Seat Belt Pretensioner System Warning Light

If the air bag/front seat belt pretensioner system is working properly, the warning light illuminates when the ignition switch is turned to the ON position or after the engine is cranked. The warning light turns off after a specified period of time.

A system malfunction is indicated if the warning light constantly flashes, constantly illuminates or does not illuminate at all when the ignition switch is turned to the ON position. If any of these occur, consult an Authorized Mazda Dealer as soon as possible. The system may not work in an accident.

⚠ WARNING

Never tamper with the air bag/ pretensioner systems and always have an Authorized Mazda Dealer perform all servicing and repairs:

Self-servicing or tampering with the systems is dangerous. An air bag/ pretensioner could accidentally activate or become disabled causing serious injury or death.

▼Maintenance

The air bag systems do not require regular maintenance. But if any of the following occurs, take your vehicle to an Authorized Mazda Dealer as soon as possible:

- The air bag system warning light flashes.
- The air bag system warning light remains illuminated.
- The air bag system warning light does not illuminate when the ignition switch is turned to the ON position.
- The air bags have deployed.
- Front passenger air bag deactivation indicator light does not illuminate when the ignition switch is turned to the ON position or does not illuminate as indicated in the chart. For more details about this indicator light and this chart, refer to “Front passenger seat weight sensors” (page 2-40).

WARNING

Do not operate a vehicle with damaged air bag/seat belt pretensioner system components:

Expended or damaged air bag/seat belt pretensioner system components must be replaced after any collision which caused them to deploy or damage them. Only a trained Authorized Mazda Dealer can fully evaluate these systems to see that they will work in any subsequent accident. Driving with an expended or damaged air bag or pretensioner unit will not afford you the necessary protection in the event of any subsequent accident which could result in serious injury or death.

Do not remove interior air bag parts:

Removing any components such as the front seats, front dashboard, the steering wheel or parts on the front and rear window pillars and along the roof edge, containing air bag parts or sensors is dangerous. These parts contain essential air bag components. The air bag could accidentally activate and cause serious injuries. Always have an Authorized Mazda Dealer remove these parts.

Dispose of the air bag properly:

Improper disposal of an air bag or a vehicle with live air bags in it can be extremely dangerous. Unless all safety procedures are followed, injury can result. Ask an Authorized Mazda Dealer how to safely dispose of an air bag or how to scrap an air bag equipped vehicle.

NOTE

If it becomes necessary to have the components or wiring system for the supplementary restraint system modified to accommodate a person with certain medical conditions in accordance with a certified physician, contact an Authorized Mazda Dealer, refer to "Customer Assistance (U.S.A.)" (page 9-2).

3 Knowing Your Mazda

Explanation of basic operations and controls; opening/closing and adjustment of various parts.

Advanced Keyless Entry and Start System 3-2
Advanced Keys* 3-2
Operation Using Advanced Keyless Functions 3-7
Operation Using Advanced Key Functions 3-13
Advanced Key Suspend Function 3-16
Warning and Beep Sounds 3-16
Setting Change (Function Customization) 3-19
When Warning Indicator/Beep is Activated 3-20

Doors and Locks 3-21
Keys (without Advanced Key) 3-21
Keyless Entry System (with Retractable Type Key) 3-22
Door Locks 3-26
Trunk Lid 3-31
Inside Trunk Release Lever 3-33
Power Windows 3-34
Rear Quarter Windows 3-36
Fuel-Filler Lid and Cap 3-37
Hood 3-38
Moonroof* 3-39

Security System 3-41
Immobilizer System (with Advanced Key) 3-41
Immobilizer System (without Advanced Key) 3-43
Theft-Deterrent System* 3-46

Steering Wheel and Mirrors 3-48
Steering Wheel 3-48
Mirrors 3-48

*Some models.

Advanced Keys*

The advanced keyless functions (advanced keyless entry and start system) enables the following operations while the advanced key is being carried (page 3-7).
- Locking/unlocking the doors, and opening the trunk lid, without operating the key.
- Starting the engine without operating the key.

The advanced key enables additional functions other than those with the advanced keyless functions (page 3-13).
- The following operations are possible using the transmitter of the keyless entry system from a distance (Lock/Unlock/Trunk/Panic button):
  - Locking/unlocking the doors.
  - Opening the trunk lid.
  - Turning on the alarm.
- Locking/unlocking the doors, opening the trunk lid, or starting the engine using the auxiliary key.

⚠ WARNING

Do not leave the keys in your vehicle with children and keep them in a place where your children will not find or play with them:

Leaving children in a vehicle with the key is dangerous. This could result in someone being badly injured or even killed. These new kinds of keys are fascinating to children. They could play with power windows or other controls, or even make the vehicle move.

Radio waves from the advanced key may affect medical equipment such as pacemakers:

Before using the advanced key near people who use medical equipment, ask the medical equipment manufacturer or your physician if radio waves from the advanced key will affect the equipment.

NOTE
- *The driver must carry the advanced key to ensure the system functions properly.*
- *Refer to Immobilizer System (page 3-41) for information regarding keys and engine starting.*
- ***(With theft-deterrent system)***
  Refer to Theft-Deterrent System (page 3-46) for information regarding keys and the prevention of vehicle and vehicle contents theft.

*Some models.

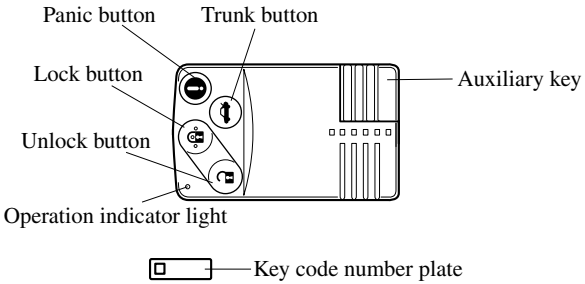

A code number is stamped on the plate attached to the key set; detach this plate and store it in a safe place (not in the vehicle) for use if you need to make a replacement key.

Also write down the code number and keep it in another safe and handy place, but not in the vehicle.

If your key is lost, consult your Authorized Mazda Dealer with the code number ready.

CAUTION

- *Because the advanced key uses low-intensity radio waves, it may not function correctly under the following conditions:*
  - *The advanced key is carried with communication devices such as cellular phones.*
  - *The advanced key contacts or is covered by a metal object.*
  - *The advanced key is near electronic devices such as personal computers.*
  - *Non-Mazda genuine electronic equipment is installed in the vehicle.*
  - *There is equipment which discharges radio waves near the vehicle.*
  - *If the vehicle is near equipment such as wireless pay devices installed at certain gas stations.*
- *The advanced key may consume battery power excessively if it receives high-intensity radio waves. Do not place the advanced key near electronic devices such as televisions or personal computers.*
- *To avoid damage to the advanced key, DO NOT:*
  - *Drop the advanced key.*
  - *Get the advanced key wet.*
  - *Disassemble the advanced key.*
  - *Expose the advanced key to high temperatures on places such as the dashboard or hood, under direct sunlight.*
  - *Place heavy objects on the advanced key.*
  - *Put the advanced key in an ultrasonic cleaner.*
  - *Put any magnetized objects close to the advanced key.*

NOTE

- *Battery life is about one year. Replace the battery when the KEY indicator light (green) flashes in the instrument cluster.*
  Refer to Advanced Key Battery Dead Warning on page 3-17.
- *Additional advanced keys can be obtained at an Authorized Mazda Dealer. Up to 6 advanced keys can be used with the advanced keyless functions per vehicle.*

▼Advanced Key Maintenance

⚠ CAUTION

- *Make sure the battery is installed with the correct pole facing upward. Battery leakage could occur if it is not installed correctly.*
- *When replacing the battery, be careful not to bend the electrical terminals or get oil on them. Also be careful not to get dirt in the transmitter as it could be damaged.*
- *There is the danger of explosion if the battery is not correctly replaced.*
- *Replace only with the same type battery (CR2025 or equivalent).*
- *Dispose of used batteries according to the following instructions.*
  - *Insulate the plus and minus terminals of the battery using cellophane or equivalent tape.*
  - *Never disassemble.*
  - *Never throw the battery into fire or water.*
  - *Never deform or crush.*

The following conditions indicate that the battery power is low:

- The KEY indicator light (green) flashes in the instrument cluster when the engine is turned off.
- The system does not operate and the operation indicator light on the transmitter does not flash when the buttons are pressed.
- The system's operational range is reduced.

Replacing the battery at an Authorized Mazda Dealer is recommended to prevent damage to the advanced key. If replacing the battery by yourself, follow the instruction below.

Replacing the advanced key battery

1. Pull out the auxiliary key.

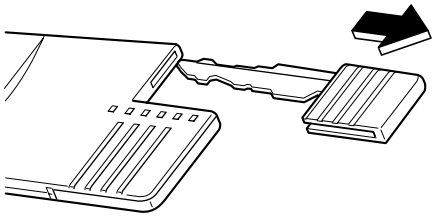

2. Release the cap using a small flathead screwdriver, then rotate and remove the cap.

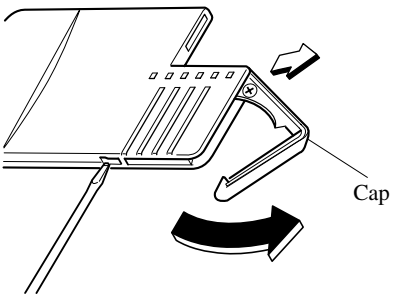

⚠ CAUTION

Do not turn the cap excessively. The cap may be damaged.

3. Insert a small flathead screwdriver into the crack and press the battery out.

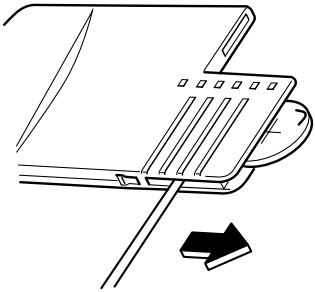

4. Insert the new battery (CR2025 or equivalent) with the positive pole (+) facing the (+) mark on the cap.

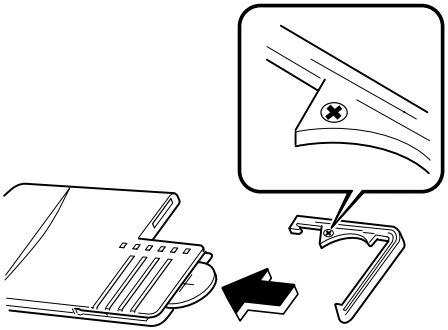

5. Rotate and close the cap.

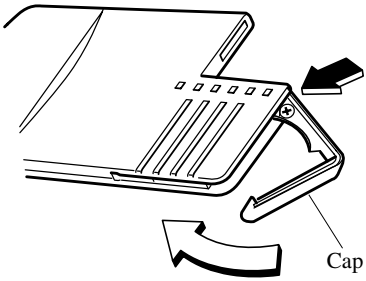

6. Reinsert the auxiliary key.

▼Service

If you have a problem with the advanced keyless functions, consult an Authorized Mazda Dealer.

If your advanced key is lost or stolen, bring all remaining advanced keys to an Authorized Mazda Dealer as soon as possible for a replacement and to make the lost or stolen advanced key inoperative.

⚠ CAUTION

Radio equipment like this is governed by laws in the United States. Changes or modifications not expressly approved by the party responsible for compliance could void the user's authority to operate the equipment.

Operation Using Advanced Keyless Functions

▼Operational Range

The system operates only when the driver is in the vehicle or within operational range while the advanced key is being carried.

NOTE
When the battery power is low, or in places where there are high-intensity radio waves or noise, the operational range may become narrower or the system may not operate.

Locking, unlocking the doors

The operational range for locking/unlocking the doors is an area of up to 80 cm (2.6 ft) from the center of the front door handles.

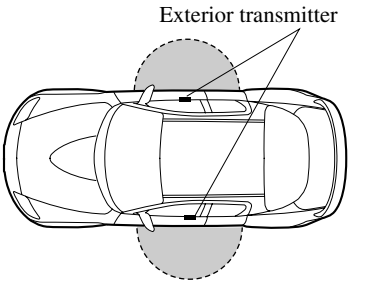

NOTE
The system may not operate if you are too close to the windows, door handles.

Opening the trunk lid

The operational range for opening the trunk lid is an area of up to 80 cm (2.6 ft) from the center of the trunk lid.

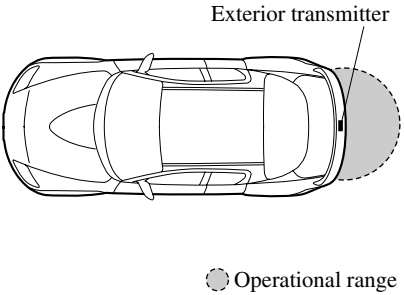

Starting the engine

The operational range for starting the engine includes nearly the entire cabin area.

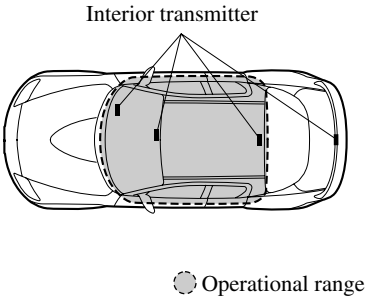

NOTE

- *The trunk is out of the operational range, however, starting the engine may be possible.*
- *The engine may not start if the advanced key is placed in the following areas:*
  - *Around the dashboard*
  - *In the storage compartments such as the glove box*
  - *On the rear parcel shelf*
- *Starting the engine may be possible even if the advanced key is outside of the vehicle and extremely close to a door and window, however, always start the engine from the driver's seat.*
  If the vehicle is started and the advanced key is not in the vehicle, the vehicle will not restart after it is shut off and the ignition switch is turned to the lock position.
- *If the advanced key is detected within operational range, the operation indicator light located in the instrument cluster flashes momentarily.*

▼Locking, Unlocking the Doors with Request Switch

All doors can be locked/unlocked by pressing the request switch on the front doors while the advanced key is being carried.

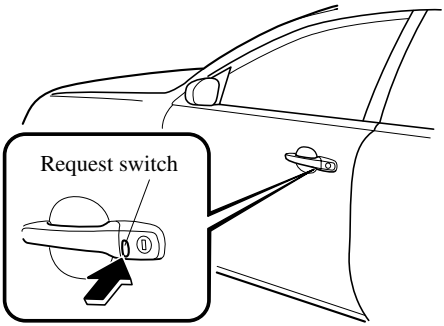

To lock

To lock the doors, press the request switch. A beep sound will be heard once and the hazard warning lights will flash once.

NOTE

(Without theft-deterrent system)
The hazard warning lights will flash once to indicate that the doors are locked.
(With theft-deterrent system)

- *The hazard warning lights will not flash.*
- *The hazard warning lights only flash when the theft deterrent system is armed or turned off, refer to the theft-deterrent system (page 3-46).*

To unlock

Driver's door request switch

To unlock the driver's door, press the request switch. A beep sound will be heard twice and the hazard warning lights will flash twice.
To unlock all doors , press the request switch again within 3 seconds and two more beep sounds will be heard.

NOTE

(Without theft-deterrent system)
The hazard warning lights will flash twice to indicate that the doors are unlocked.
(With theft-deterrent system)

- *The hazard warning lights will not flash.*
- *The hazard warning lights only flash when the theft deterrent system is armed or turned off, refer to the theft-deterrent system (page 3-46).*

Front passenger door request switch

To unlock the doors, press the request switch. A beep sound will be heard twice and the hazard warning lights will flash twice.

NOTE

- *Confirm that all doors are securely locked.*
- *All doors cannot be locked when any door is open.*
- *A beep sound is heard for confirmation when the doors are locked/unlocked using the request switch. If your prefer, the beep sound can be turned off (page 3-19).*
- *The setting can be changed so that the doors are locked automatically without pressing the request switch (page 3-19).*
  (Auto-lock function)
  A beep sound is heard when all doors are closed while the advanced key is being carried. All doors are locked automatically after about 3 seconds when the advanced key is out of the operational range. Also, the hazard warning lights flash once. (Even if the driver is in the operational range, all doors are locked automatically after about 30 seconds.)
  If you are out of the operational range before the doors are completely closed, the auto-lock function will not work. Always make sure that all doors are closed and locked before leaving the vehicle.
- ***(Auto re-lock function)***
  After unlocking all doors by pressing the request switch, all doors will automatically lock and the hazard warning light will flash if any of the following operations are not performed within about 30 seconds.
  - *A door is opened.*
  - *The auxiliary key is inserted into the ignition switch.*
  - *The start knob is pushed.*

▼Opening the Trunk Lid with Request Switch

The trunk lid can be opened by pressing the request switch on the under side of the trunk lid above the license plate while the advanced key is being carried.

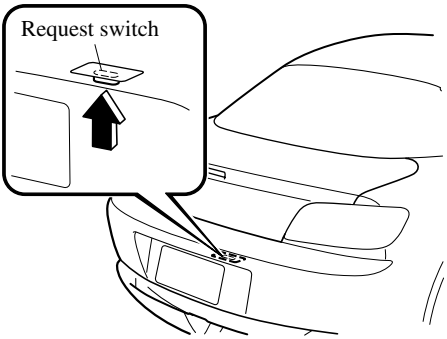

NOTE

If the advanced key is left in the trunk, the trunk lid will close, however, the trunk lid can be opened using the request switch and the vehicle could be stolen.

▼Starting the Engine

<u>Ignition switch positions</u>

Without a traditional key, some of the ignition switch functions are different.

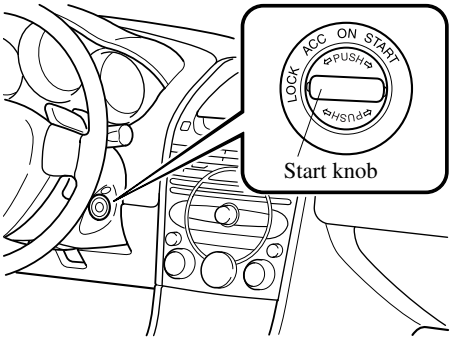

LOCK (Released)

The steering wheel locks to help protect against theft.

LOCK (Depressed)

The ignition switch can be turned to the ACC position when the KEY indicator light (green) illuminates in the instrument cluster.

⚠ WARNING

Before leaving the driver's seat, always put the key or start knob to LOCK position, set the parking brake and make sure the shift lever is in P with an automatic transmission or in 1 or R with a manual transmission:

Intentionally placing the key or start knob into LOCK position is much more important where you will not be removing the key to leave the vehicle and because leaving it in other positions will disable some of the vehicle security systems and run the battery down.
Leaving the driver's seat without putting the ignition switch in LOCK position, setting the parking brake and the shift lever is in P with an automatic transmission or in 1 or R with a manual transmission is dangerous. Unexpected vehicle movement could occur. This could cause an accident.

NOTE

- *If turning the ignition switch is difficult, jiggle the steering wheel from side to side.*
- ***(Automatic transmission)***
  The ignition switch cannot be turned from the ACC position to the LOCK position when the shift lever is not in P.

ACC (Accessory)

The steering wheel unlocks and some electrical accessories will operate.

NOTE

The Advanced Keyless Entry System does not function in the ACC position, and the doors will not lock/unlock using the transmitter or request switches even if the advanced key is carried away from the vehicle.

ON

This is the normal running position after the engine is started. The warning lights (except brakes) should be inspected before the engine is started (page 5-39).

NOTE

When the ignition switch is turned to the ON position, the sound of the fuel pump motor operating near the fuel tank can be heard. This does not indicate an abnormality.

START

The engine is started in this position. It will crank until you release the start knob; then it returns to the ON position. The brake warning light can be checked after the engine is started (page 5-39).

Starting the engine

NOTE

- *Engine-starting is controlled by the spark ignition system.*
  This system meets all Canadian Interference-Causing Equipment Standard requirements regulating the impulse electrical field strength of radio noise.
- *The advanced key must be carried because the advanced key carries an immobilizer chip that must communicate with the engine controls at short range.*
- *When starting the engine, be sure the start knob is securely attached before trying to operate it. If the knob becomes detached from the ignition switch, re-attach it by pushing it on to the ignition switch.*

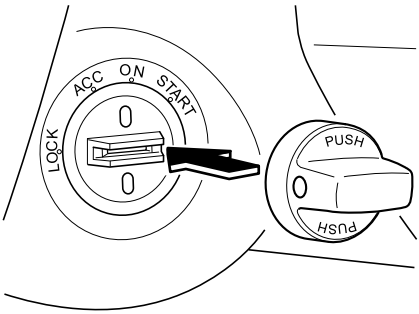

1. Make sure the advanced key is being carried.
2. Occupants should fasten their seat belts.
3. Make sure the parking brake is on.
4. Depress the brake pedal.
5. **(Manual transmission)**
   Depress the clutch pedal all the way and shift into neutral.
   Keep the clutch pedal depressed while cranking the engine.
   (Automatic transmission)
   Put the vehicle in park (P). If you must restart the engine while the vehicle is moving, shift into neutral (N).

NOTE

(Manual transmission)
*The starter will not operate if the clutch pedal is **not** depressed all the way.*
(Automatic transmission)
The starter will not operate if the shift lever is not in P or N.

6. Push the start knob slowly all the way in.

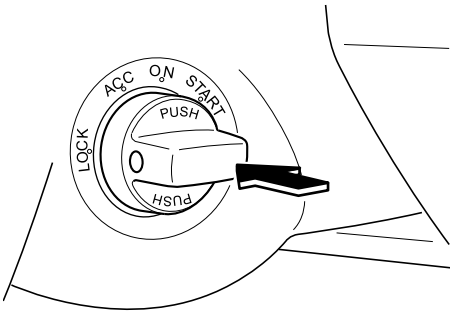

7. Verify that the KEY indicator light (green) illuminates in the instrument cluster. The KEY warning light (red) means you cannot continue to start the engine using the Advanced Keyless System. You may have to use the auxiliary key instead (page 3-20).

NOTE
In the following cases, the KEY warning light (red) illuminates and the engine will not start.
- *The advanced key battery is dead.*
- *The advanced key is out of operational range.*
- *The advanced key is placed in areas where it is difficult for the system to detect the signal (page 3-7).*
- *A key from another manufacturer similar to the advanced key is in the operational range.*

8. Turn the ignition switch to the ACC position while pushing the start knob in.

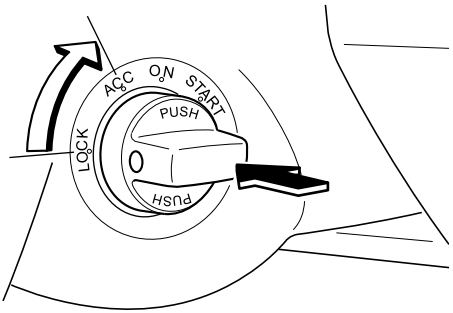

9. Turn the ignition switch from the ACC position to the START position and hold (up to 10 seconds at a time) until the engine starts.

⚠ CAUTION

Don't try the starter for more than 10 seconds at a time. If the engine stalls or fails to start, wait 10 seconds before trying again. Otherwise, you may damage the starter and drain the battery.

10. After starting the engine, let it idle for about 10 seconds.

NOTE
- *In extremely cold weather or after the vehicle has not been driven in several days, let the engine warm up without operating the accelerator.*
- *Whether the engine is cold or warm, it should be started without use of the accelerator.*

Turning off the engine

1. Move the shift lever to the P position (Automatic transmission).
2. Turn the ignition switch from the ON position to the ACC position.

NOTE
When the engine is turned off and the ignition switch it turned from the ACC position to the LOCK position, the KEY indicator light (green) flashes in the instrument cluster for about 30 seconds if the battery power of the advanced key is low. Replace the battery with a new one.
Refer to Battery Replacement (page 3-6).

3. Push in the start knob from the ACC position and turn it to the LOCK position.

⚠ CAUTION

When leaving the vehicle, make sure the ignition switch is turned to the LOCK position.

NOTE

- *When turning the ignition switch to the LOCK position, the ignition switch has to be pushed in from the ACC position and turned. Without being pushed in, the ignition switch stops at the ACC position and the vehicle battery may be discharged if the ignition switch is left in the ACC position. When leaving the vehicle, make sure the ignition switch is turned to the LOCK position.*
- *If the vehicle is left with the ignition switch not in the LOCK position, a beep sound is heard and the indicator light flashes to notify the driver.*
  Refer to Warning Beep (page 3-16).

Operation Using Advanced Key Functions

▼Keyless Entry System

This system uses the more traditional key buttons to remotely lock and unlock the doors and opens the trunk lid.
It can also help you signal for attention.
Press the buttons slowly and carefully.

NOTE

- *The keyless entry system is designed to operate up to about 2.5 m (8 ft) from the center of the vehicle, but this may vary due to local conditions.*
- *The system does not operate when the ignition switch is not in the LOCK position or the start knob is pushed in.*
- *With the start knob installed in the LOCK position, the system is fully operational. If the ignition switch is not in the LOCK position or the start knob is pushed in, the system does not operate.*
- *All doors cannot be locked by pressing the lock button while any door is open. The hazard warning lights will also not flash.*
- *If the transmitter does not operate when pressing a button or the operational range becomes too small, the battery may be dead. To install a new battery, refer to Maintenance (page 3-5).*

Transmitter

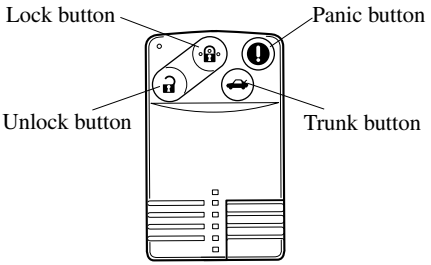

NOTE

- ***(U.S.A.)***
  This device complies with Part 15 of the FCC Rules. Operation is subject to the following two conditions: (1) this device may not cause harmful interference, and (2) this device must accept any interference received, including interference that may cause undesired operation.
- ***(CANADA)***
  This device complies with RSS-210 of Industry CANADA. Operation is subject to the following two conditions: (1) this device may not cause interference, and (2) this device must accept any interference, including interference that may cause undesired operation of the device.

The operation indicator light flashes when the buttons are pressed.

Lock button

To lock the doors, press the lock button. A beep sound will be heard once and the hazard warning lights will flash once.

To confirm that all doors have been locked, press the lock button again within 5 seconds. If they are closed and locked, the horn will sound.

NOTE

(Without theft-deterrent system)
The hazard warning lights will flash once to indicate that all doors are locked.
(With theft-deterrent system)

- *The hazard warning lights will not flash.*
- *The hazard warning lights only flash when the theft deterrent system is armed or turned off, refer to the theft-deterrent system (page 3-46).*

NOTE

- *All doors cannot be locked when any door is open.*
- *Confirm that all doors are locked visually or audibly by use of the double click.*

Unlock button

To unlock the driver's door, press the unlock button. A beep will be heard twice and the hazard warning lights will flash twice.

To unlock all doors , press the unlock button again within 3 seconds and two more beep sounds will be heard.

NOTE

(Without theft-deterrent system)
The hazard warning lights will flash twice to indicate that all doors are unlocked.
(With theft-deterrent system)

- *The hazard warning lights will not flash.*
- *The hazard warning lights only flash when the theft deterrent system is armed or turned off, refer to the theft-deterrent system (page 3-46).*

NOTE

Auto re-lock function
After unlocking with the transmitter, all doors will automatically lock if one of the doors is not opened within about 30 seconds.

Trunk button

To open the trunk, press the trunk button for more than 1 second.

Panic button

If you witness from a distance someone attempting to break into or damage your vehicle, pressing the panic button will activate the vehicle's alarm.

NOTE
The panic button will work whether any door is open or closed.

(Turning on the alarm)
Pressing the panic button for 1 second or more will trigger the alarm for about 2 minutes and 30 seconds, and the following will occur:
- The horn sounds intermittently.
- The hazard warning lights flash.

NOTE
However, if the driver is too close to the vehicle the panic button may not function.

(Turning off the alarm)
The alarm stops by pressing any button on the transmitter.

▼Auxiliary Key Function

Use the auxiliary key stored in the advanced key in the event of a dead transmitter battery or malfunction.

Removing the auxiliary key

Pull out the auxiliary key from the advanced key.

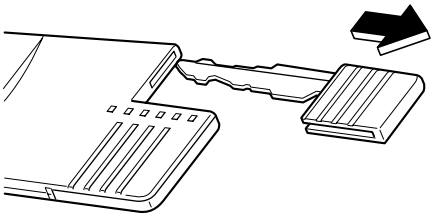

Locking, unlocking the doors

The doors can be locked/unlocked using the auxiliary key, refer to Locking, Unlocking with Key (page 3-27).

Opening the trunk lid

The trunk lid can be opened using the auxiliary key, refer to Opening and Closing the Trunk Lid (page 3-32).

Starting the engine

The engine can be started with the auxiliary key, refer to Ignition Switch (page 5-2).

Locking, unlocking the glove box

The glove box can be locked/unlocked using the auxiliary key, refer to Glove Box (page 6-50).

Advanced Key Suspend Function

If one key is left in the vehicle or trunk and the second key is used to lock the vehicle, the functions of the advanced key left in the vehicle or the trunk are temporarily suspended to prevent theft of the vehicle.
The following are inoperable:
- Starting the engine using the start knob.
- Operating the request switches.

To restore these functions, perform any one of the following:
- Press the lock or unlock button on the advanced key which has had its functions suspended.
- While carrying another advanced key, push in the start knob until the KEY indicator light (green) in the instrument cluster illuminates.
- Insert the auxiliary key and turn the ignition switch to the ON position.

Warning and Beep Sounds

▼System Malfunction Warning Beep

If any malfunction occurs in the advanced keyless function, the KEY warning light (red) in the instrument cluster illuminates continuously and beep sounds will be heard.

⚠ CAUTION

If the KEY warning light (red) remains illuminated, do not continue to drive the vehicle with the advanced keyless function. Park the vehicle in a safe place and use the auxiliary key to continue driving the vehicle. Have the vehicle inspected at an Authorized Mazda Dealer as soon as possible. Refer to Ignition Switch (page 5-2).

▼Start Knob Not in LOCK Warning Beep

If the start knob is in the ACC position and the driver's door is opened, a continuous beep sound will be heard to notify the driver that the start knob has not been returned to the LOCK position. In this case, the keyless entry system does not operate, the car cannot be locked, and the battery will run down.

▼Advanced Key Removed from Vehicle Warning Beep

Under the following conditions, a beep sound will be heard 6 times and the KEY warning light (red) will flash continuously when the start knob has not been returned to the LOCK position to notify the driver that the advanced key has been removed. The KEY warning light (red) will stop flashing when the advanced key is back inside the vehicle:

- The start knob has not been returned to the LOCK position, the driver's door is open, and the advanced key is removed from the vehicle.
  However the beep sound will be heard continuously when the start knob is in the ACC position and the door is open due to the activation of the warning beep sound indicating that the start knob is not in the LOCK position.
- The start knob has not been returned to the LOCK position and all the doors are closed after removing the advanced key from the vehicle.

NOTE
Because the advanced key utilizes low-intensity radio waves, the Advanced Key Removed From Vehicle Warning may activate if the advanced key is carried together with a metal object or it is placed in a poor signal reception area.

▼Request Switch Inoperable Warning Beep

If the request switch for a front door is pressed under the following conditions while the advanced key is being carried, a beep will be heard 6 times to indicate that the front doors cannot be locked.

- A door is open (door ajar included).
- The start knob has not been returned to the LOCK position.
- The auxiliary key is inserted into the ignition switch.

▼Advanced Key Battery Dead Warning

When the start knob is returned to the ACC or LOCK position from the ON position, the KEY indicator light (green) flashes for approximately 30 seconds indicating that the remaining battery power is low. Replace with a new battery before the advanced key becomes unusable.
Refer to Advanced Key Maintenance (page 3-5).

NOTE
The advanced key can be set so that the KEY indicator light (green) does not flash even if the battery power is low.
Refer to Setting Change (page 3-19).

▼Engine Start Not Permitted Warning

Under the following conditions, the KEY warning light (red) flashes to inform the driver that the start knob will not rotate to the ACC position even if it is pushed in from the LOCK position.

- The advanced key battery is dead.
- The advanced key is not within operational range.
- The advanced key is placed in areas where it is difficult for the system to detect the signal (page 3-7).
- A key from another manufacturer similar to the advanced key is in the operational range.

▼Advanced Key Left-in-trunk Warning Beep

If the advanced key is left in the trunk compartment with all doors locked and the trunk lid closed, a beep sound is heard for about 10 seconds to remind the driver the advanced key has been left in the trunk compartment. If this happens, open the trunk lid by pressing the request switch and remove the advanced key. An advanced key removed from the trunk may not function because its functions may have been temporarily suspended. To restore the advanced key function, perform the applicable procedure (page 3-16).

▼Advanced Key Left-in-vehicle Warning Beep

If an advanced key is left in the vehicle cabin and all doors are locked using a separate advanced key, a beep sound is heard for about 10 seconds to remind the driver that the advanced key has been left in the vehicle cabin. If this happens, the doors lock but the functions of the advanced key left in the vehicle cabin may be temporarily suspended. Perform the following procedure to restore the functions of the advanced key (page 3-16).

Setting Change (Function Customization)

The following function settings are possible. These settings can only be changed by an Authorized Mazda Dealer.

Setting	Function	At Initial Setting	After Setting Change
Advanced key battery dead indicator	KEY indicator light (green) flashes to indicate that the advanced key battery power is low.	Activated	Deactivated
Lock/unlock operation confirmation beep sound*1	A beep sound is heard to confirm that all doors or the trunk lid have been locked/unlocked.	Activated	Deactivated
Autolock function*2	When all doors are closed and the advanced key is being carried and out of operational range, all the doors automatically lock after 3 seconds. (Even if the driver is in the operational range, all doors are locked automatically after about 30 seconds.)	Deactivated	Activated

*1: When the autolock function is operating, the warning sound will be heard regardless of the setting.
*2: When Autolock function is enabled, windows will not automatically close. You must close before leaving vehicle.

When Warning Indicator/Beep is Activated

Under the following conditions, warning beeps are heard and a warning/indicator light in the instrument cluster illuminates to notify the driver of improper operation of the advanced key to prevent theft of the vehicle (page 3-16).

Warning	What to check
When a door is open, a continuous beep sound will be heard.	Check whether the start knob has been returned to the LOCK position.
When a door is open, 6 beep sounds are heard, and the KEY warning light (red) in the instrument cluster flashes.	Check whether the advanced key has been removed from the vehicle.
When a door is closed, a beep sound is heard 6 times, and the KEY warning light (red) in the instrument cluster flashes.	Check whether the advanced key has been removed from the vehicle.
When attempting to lock the doors, a beep sound is heard.	Check whether the advanced key has been left in the vehicle.
	Check whether the start knob has been returned to the LOCK position.
	Check whether a door is open.
When the KEY indicator light (green) flashes in the instrument cluster.	The advanced key battery power is low. Replace the battery with a new one. Refer to Advanced Key Maintenance on page 3-5.
When the KEY warning light (red) remains illuminated in the instrument cluster.	The advanced key is malfunctioning. Park the vehicle in a safe place, and use the auxiliary key to continue driving the vehicle. Have the vehicle inspected at an Authorized Mazda Dealer as soon as possible.

Keys (without Advanced Key)

⚠ WARNING

Do not leave the keys in your vehicle with children and keep them in a place where your children will not find or play with them:

Leaving children in a vehicle with the key is dangerous. This could result in someone being badly injured or even killed. These new kinds of keys are fascinating to children. They could play with power windows or other controls, or even make the vehicle move.

NOTE

- *Refer to Immobilizer System (page 3-43) for information regarding keys and engine starting.*
- ***(With theft-deterrent system)***
  Refer to Theft-Deterrent System (page 3-46) for information regarding keys and the prevention of vehicle and vehicle contents theft.

The keys operate all locks.

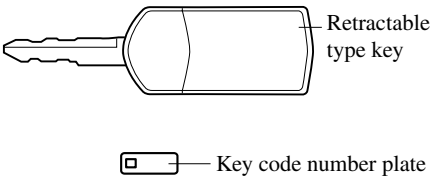

A code number is stamped on the plate attached to the key set; detach this plate and store it in a safe place (not in the vehicle) for use if you need to make a replacement key.

NOTE

Write down the code number and keep it in a separate safe and convenient place, but not in the vehicle.
If your key is lost, consult your Authorized Mazda Dealer and have your code number ready.

Key extend/retract method (Retractable type key)

To extend the key, press the release button.

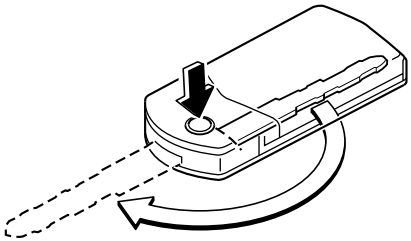

To retract the key, rotate it into the holder while pressing the release button.

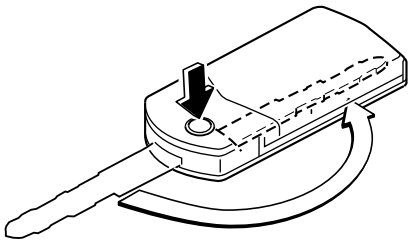

Keyless Entry System (with Retractable Type Key)

This system remotely locks and unlocks the doors and opens the trunk lid.
It can also help you signal for attention.
Operating the theft-deterrent system with the keyless entry system transmitter is also possible on theft-deterrent system-equipped vehicles.
Press the buttons slowly and carefully.

CAUTION

To avoid damage to the transmitter, do not:
- *Drop the transmitter.*
- *Get the transmitter wet.*
- *Disassemble the transmitter.*
- *Expose the transmitter to any kind of magnetic field.*
- *Expose the transmitter to high temperatures on places such as the dashboard or hood, under direct sunlight.*

NOTE
- *The keyless entry system is designed to operate up to about 2.5 m (8 ft) from the center of the vehicle, but this may vary due to local conditions.*
- *The system doesn't operate when the key is in the ignition switch.*
- *Doors cannot be locked by pressing the lock button while any other door is open. Also, the hazard warning lights will not flash.*
- *If the transmitter does not operate when pressing a button or the operation range becomes too small, the battery may be dead. To install a new battery, refer to Maintenance (page 3-24).*
- *Additional transmitters can be obtained at an Authorized Mazda Dealer. Up to 3 transmitters can be used with the keyless entry system per vehicle. Bring all transmitters to an Authorized Mazda Dealer when additional transmitters are required.*

▼Transmitter

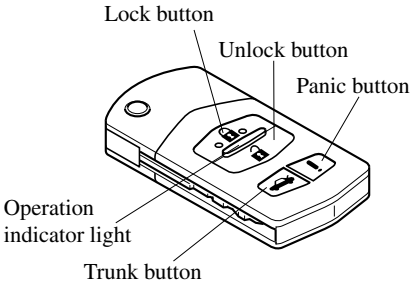

NOTE

- ***(U.S.A.)***
  This device complies with Part 15 of the FCC Rules. Operation is subject to the following two conditions: (1) this device may not cause harmful interference, and (2) this device must accept any interference received, including interference that may cause undesired operation.
- ***(CANADA)***
  This device complies with RSS-210 of Industry CANADA. Operation is subject to the following two conditions: (1) this device may not cause interference, and (2) this device must accept any interference, including interference that may cause undesired operation of the device.

The operation indicator light flashes when the buttons are pressed.

Lock button

To lock the doors, press the lock button and the hazard warning lights will flash once.

To confirm that all doors have been locked, press the lock button again within 5 seconds. If they are closed and locked, the horn will sound.

NOTE

- ***(Without theft-deterrent system)***
  The hazard warning lights will flash once to indicate that all doors are locked.
- ***(With theft-deterrent system)***
  - *The hazard warning lights will not flash.*
  - *The hazard warning lights only flash when the theft deterrent system is armed or turned off, refer to the theft-deterrent system (page 3-46).*

NOTE

- *All doors cannot be locked when any door is open and the key is in the ignition switch.*
- *Confirm that all doors are locked visually or audibly by use of the double click.*

Unlock button

To unlock the driver's door, press the unlock button and the hazard warning lights will flash twice.

To unlock all doors, press the unlock button again within 5 seconds.

NOTE

(Without theft-deterrent system)
The hazard warning lights will flash twice to indicate that all doors are unlocked.
(With theft-deterrent system)

- *The hazard warning lights will not flash.*
- *The hazard warning lights only flash when the theft deterrent system is armed or turned off, refer to the theft-deterrent system (page 3-46).*

NOTE

Auto re-lock function
After unlocking with the transmitter, all doors will automatically lock if one of the doors is not opened within about 30 seconds.

Trunk button

To open the trunk, press the trunk button for more than 1 second.

Panic button

If you witness from a distance someone attempting to break into or damage your vehicle, pressing the panic button will activate the vehicle's alarm.

NOTE

The panic button will work whether any door is open or closed.

Turning on the alarm

Pressing the panic button for 1 second or more will trigger the alarm for about 2 minutes and 30 seconds, and the following will occur:

- The horn sounds intermittently.
- The hazard warning lights flash.

Turning off the alarm

Press any button on the transmitter.

▼Transmitter Maintenance

If the buttons on the transmitter are inoperable and the operation indicator light does not flash, the battery may be dead.
Replace with a new battery before the transmitter becomes unusable.

⚠ CAUTION

- *Install the battery with the positive pole (+) facing down. Battery leakage could occur if it is not installed correctly.*
- *When replacing the battery, be careful not to bend the electrical terminals or get oil on them. Also be careful not to get dirt in the transmitter as it could be damaged.*
- *There is the danger of explosion if the battery is not correctly replaced.*
- *Replace only with the same type battery (CR1620 or equivalent).*
- *Dispose of used batteries according to the following instructions.*
  - *Insulate the plus and minus terminals of the battery using cellophane or equivalent tape.*
  - *Never disassemble.*
  - *Never throw the battery into fire and/or water.*
  - *Never deform or crush.*

Replacing the transmitter battery

1. Unfold the key (page 3-21).

2. Insert a small flathead screwdriver into the slot and push the tab to remove the key from the transmitter.

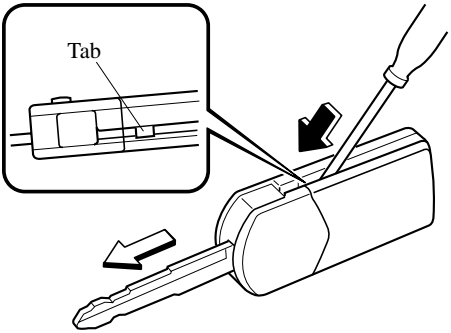

3. Insert a small flathead screwdriver into the slot and gently pry open the transmitter.

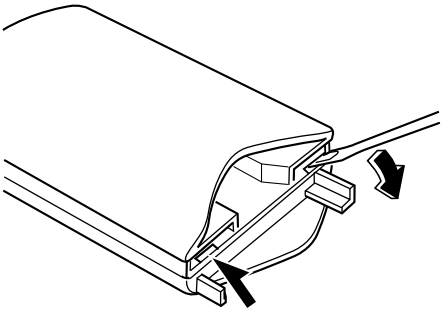

4. Press the portion of the battery indicated by A and remove the battery.

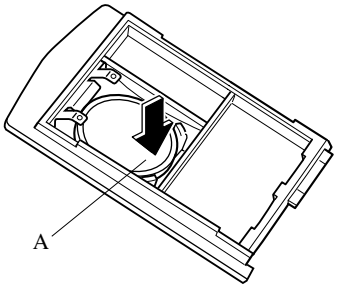

NOTE

If it is difficult to remove the battery by pressing with a finger, use a small flathead screwdriver to press out the battery.

5. Put in the new battery (CR1620 or equivalent) with the positive pole (+) facing down.

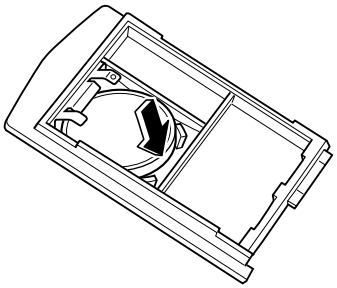

6. Align the front and back covers and snap the transmitter shut.
7. Install the key to the transmitter.

▼Service

If you have a problem with the keyless entry system, consult an Authorized Mazda Dealer.

If your transmitter is lost or stolen, bring all remaining transmitters to an Authorized Mazda Dealer as soon as possible for a replacement and to make the lost or stolen transmitter inoperative.

⚠ CAUTION

Radio equipment like this is governed by laws in the United States. Changes or modifications not expressly approved by the party responsible for compliance could void the user's authority to operate the equipment.

Door Locks

⚠ WARNING

Always take all children and pets with you or leave a responsible person with them:

Leaving a child or a pet unattended in a parked vehicle is dangerous. In hot weather, temperatures inside a vehicle can become high enough to cause brain damage or even death.

Do not leave the keys in your vehicle with children and keep them in a place where your children will not find or play with them:

Leaving children in a vehicle with the key is dangerous. This could result in someone being badly injured or even killed. They could play with power windows or other controls, or even make the vehicle move.

Keep all doors locked when driving:

Unlocked doors in a moving vehicle are dangerous. Passengers can fall out if a door is accidentally opened and can more easily be thrown out in an accident.

Always close all the windows, lock the doors and take the key with you when leaving your vehicle unattended:

Leaving your vehicle unlocked is dangerous as children could lock themselves in a hot vehicle, which could result in death. Also, a vehicle left unlocked becomes an easy target for thieves and intruders.

▼Locking, Unlocking with Key

The driver's door can be locked/unlocked with the key.
Turn the key toward the front to unlock, toward the back to lock.

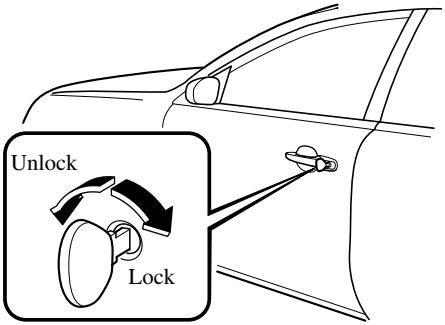

▼Locking, Unlocking with Request Switch (with Advanced Key)

The doors can be locked/unlocked by operating the request switch while carrying the advanced key outside the vehicle, refer to Operations Using Advanced Keyless Functions (page 3-7).

▼Locking, Unlocking with Transmitter (with Advanced Key)

The doors can be locked/unlocked by operating the keyless entry system transmitter, refer to Keyless Entry System (page 3-13).

▼Locking, Unlocking with Transmitter (with Retractable Type Key)

The doors can be locked/unlocked by operating the keyless entry system transmitter, refer to Keyless Entry System (page 3-22).

▼Locking, Unlocking with Door-Lock Knob

To lock either front door from the inside, push the door-lock knob.
To unlock, pull it out.

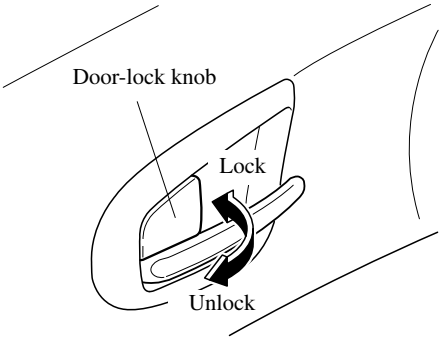

To lock either front door with the door-lock knob from the outside, push the door-lock knob to the lock position and close the door.

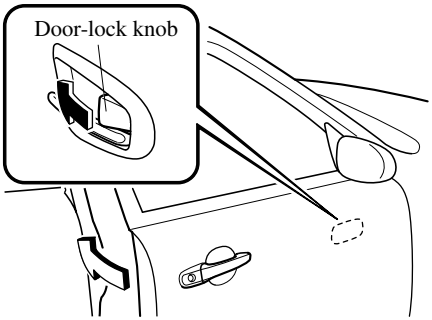

NOTE

- ***(With advanced key)***
  The driver's door cannot be locked using the door-lock knob from the outside.
- ***(Without advanced key)***
  The driver's door cannot be locked using the door-lock knob from the outside if the key is in the ignition switch.
- *When locking the doors this way, be careful not to leave the key inside the vehicle.*

▼Power Door Locks

Vehicle lock-out prevention

(With advanced key)
The vehicle lock-out prevention feature prevents you from locking yourself out of the vehicle. All doors will automatically unlock if they are locked using the power door locks with any door open.
(Without advanced key)
The vehicle lock-out prevention feature prevents you from locking yourself out of the vehicle. With the key in the ignition switch, all doors will automatically unlock if they are locked using the power door locks with any door open.

Locking, unlocking with key

All doors lock automatically when the driver's door is locked with the key. All doors unlock when the driver's door is unlocked and the key is held in the unlock position for one second or longer.

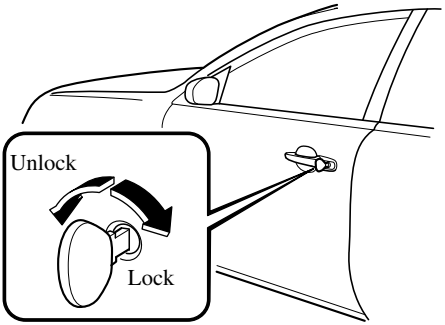

NOTE
Holding the key in the unlocked position in the driver's door lock for about a second unlocks all doors. To unlock only the driver's door, insert the key into the driver's door lock and turn the key briefly to the unlock position and then immediately return it to the center position.

Locking, unlocking with door-lock switch

All doors lock automatically when LOCK is pushed. They all unlock when the unmarked part of the door-lock switch is pushed.

Driver's door

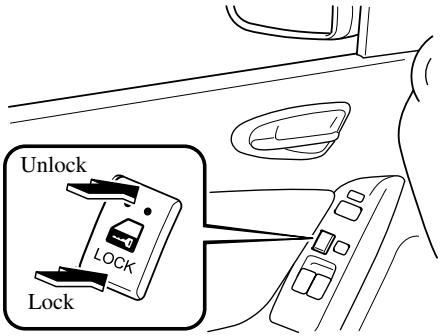

Passenger's door

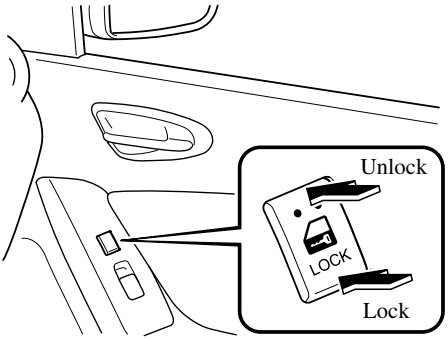

Locking, unlocking with request switch (with advanced key)

All doors can be locked/unlocked by operating the request switch on the front doors while carrying the advanced key outside the vehicle, refer to Operations Using Advanced Keyless Functions (page 3-7).

Locking, unlocking with transmitter (with advanced key)

All doors can be locked/unlocked by operating the keyless entry system transmitter, refer to Keyless Entry System (page 3-13).

Locking, unlocking with transmitter (with retractable type key)

All doors can be locked/unlocked by operating the keyless entry system transmitter, refer to Keyless Entry System (page 3-22).

▼Freestyle Doors

The pillarless freestyle doors are front and rear-hinged for ease of ingress and egress to the rear seat.

Opening the freestyle doors

1. Open the front door first.

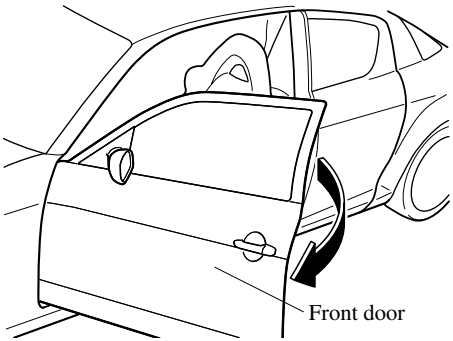

2. Pull the rear door handle and open the rear door.

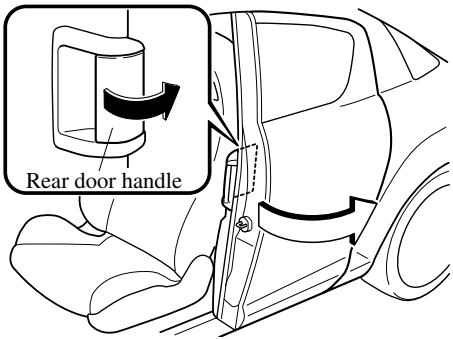

⚠ CAUTION

Before closing a front door make sure other passengers are not operating a rear door and a rear passenger's head or hands are away from the rear door. If the front door is closed while a passenger is operating the rear door handle, a hand or fingers could be injured if the handle is forced back. Also, a rear passenger could hit their head against the door during access to the rear seat.

NOTE

- *The rear door cannot be opened while the front door is closed.*
- *Make sure the front seatbelt is unfastened before the rear door is opened. The rear door can't be opened with the front seatbelt fastened because the front seatbelt may lock.*
- *If any door is left open for more than about an hour, the front seatbelt will lock, and the rear door cannot be opened. If this happens, close all doors and open the rear door again.*
- *This vehicle is not equipped with child safety locks due to the design of the front and rear doors. The rear doors must be closed before the front doors, and the rear doors cannot be opened until the front doors are opened.*

Closing the freestyle doors

1. Close the rear door first, and then close the front door.

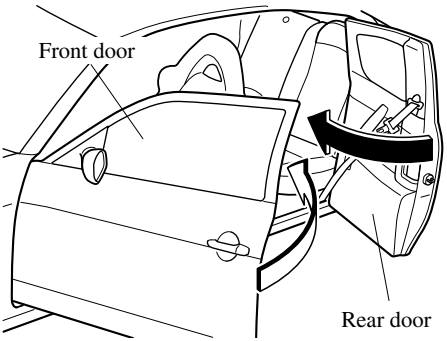

⚠ CAUTION

Before closing a front door make sure other passengers are not operating a rear door and a rear passenger's head or hands are away from the rear door. If the front door is closed while a passenger is operating the rear door handle, a hand or fingers could be injured if the handle is forced back. Also, a rear passenger could hit their head against the door during access to the rear seat.

NOTE

The front door cannot latch or lock while the rear door is opened.

2. Make sure the freestyle doors are securely closed.

WARNING

Make sure the rear door is closed securely before closing the front door:

Driving with the doors not securely closed is dangerous. If the rear door is not completely closed, the front door will not be securely closed. This could cause the front door to open unexpectedly while driving and may result in an accident.

Trunk Lid

WARNING

Never allow a person to ride in the trunk:

Allowing a person to ride in the trunk is dangerous. In addition, the person in the trunk could be seriously injured or killed during sudden braking or a collision.

Keep the trunk closed when driving:

Exhaust gas entering the cabin of a vehicle through an open trunk is dangerous. This gas contains CO (carbon monoxide), which is colorless, odorless, and highly poisonous. If inhaled, it can cause loss of consciousness and death.

▼Opening and Closing the Trunk

⚠ WARNING

Close the trunk lid and do not allow children to play inside the vehicle:

Leaving the trunk lid open or leaving children in the vehicle with the keys is dangerous. Children could open the trunk lid and climb inside resulting in possible injury or death from heat exposure.

Always keep the car from being a tempting place to play by locking doors and the trunk, and keeping the keys where children can not play with them:

Leaving children or animals unattended in a parked vehicle is dangerous. Babies left sleeping and children who lock themselves in cars or trunks can die very quickly from heat prostration. Do not leave your children or pets alone in a car at any time. Do not leave the car or the trunk unlocked.

Opening the trunk lid with the key

Insert the key into the slot and turn it clockwise.

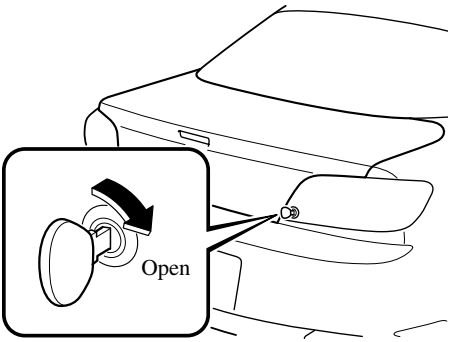

Opening the trunk lid with the request switch (with advanced key)

The trunk lid can be opened by operating the request switch on the trunk lid while carrying the advanced key outside the vehicle, refer to Operations Using Advanced Keyless Functions (page 3-7).

Opening the trunk lid with the transmitter (with advanced key)

The trunk lid can be opened by operating the keyless entry system transmitter, refer to Keyless Entry System (page 3-13).

Opening the trunk lid with the transmitter (with retractable type key)

The trunk lid can be opened by operating the keyless entry system transmitter, refer to Keyless Entry System (page 3-22).

Opening the trunk lid with the remote release button

Push the release button.

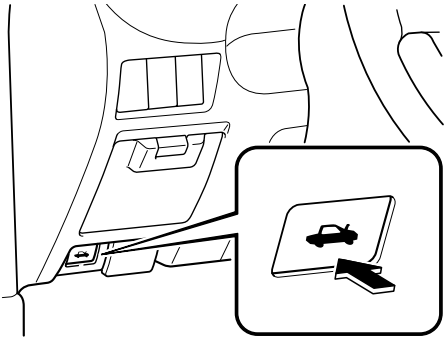

Closing the trunk lid

Grasp the inner handle and pull the trunk lid down, then push the trunk lid down until it locks securely. Be careful not to slam it. Pull up on the trunk lid to make sure it is secured.

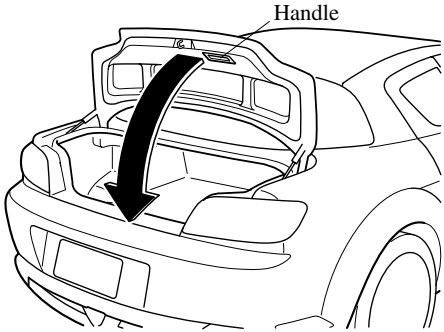

▼Trunk Light

The trunk light is on when the lid is open and off when it's closed.

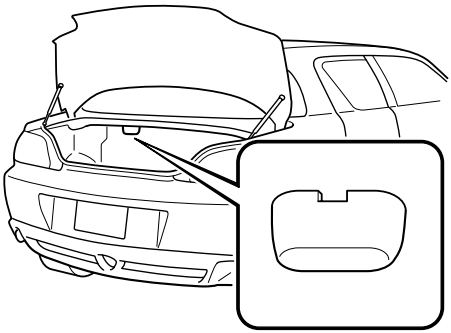

NOTE

To prevent the battery from being discharged, do not leave the trunk open for a long period when the engine is not running.

Inside Trunk Release Lever

Your vehicle is equipped with an inside trunk release lever that provides a means of escape for children and adults in the event they become locked inside the trunk.

No matter how careful adults might be with keys and locking their cars, parents should be aware that children may be tempted to play around vehicles and use the trunk as a hiding place.

Adults are advised to familiarize themselves with the operation and location of the inside trunk release lever so that all children can be told about it in an appropriate way, keeping in mind that most vehicles don't have such levers.

⚠ WARNING

Close the trunk lid and do not allow children to play inside the vehicle:

Leaving the trunk lid open or leaving children in the vehicle with the keys is dangerous. Children could open the trunk lid and climb inside resulting in possible injury or death from heat exposure.

Always keep the car from being a tempting place to play by locking doors and the trunk, and keeping the keys where children can not play with them:

Leaving children or animals unattended in a parked vehicle is dangerous. Babies left sleeping and children who lock themselves in cars or trunks can die very quickly from heat prostration. Do not leave your children or pets alone in a car at any time. Do not leave the car or the trunk unlocked.

▼Opening the Trunk Lid from the Inside

Slide the inside trunk release lever in the direction of the arrow. The lever is made of material that will glow for hours in the darkness of the trunk following a brief exposure to ambient light.

The inside trunk release lever is located on the inside of the trunk end trim.

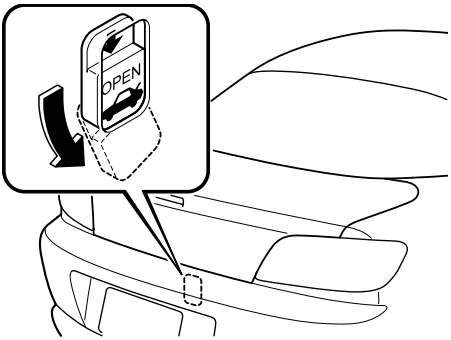

Power Windows

The ignition switch must be in the ON position for the power windows to operate.

⚠ WARNING

Make sure the opening is clear before closing a window:

Closing power windows are dangerous. A person's hands, head, or even neck could be caught by the window and result in serious injury or even death.
This warning applies especially to children.

Always lock all passenger power windows with the power window lock switch on the driver's side while children are in the vehicle, and never allow children to play with power window switches:

Leaving the power window switches unlocked while children are in the vehicle is dangerous. Power window switches that are not locked with the power window lock switch would allow children to operate power windows unintentionally which could result in serious injury if a child's hands, head or neck becomes caught by the window.

▼Operating the Driver's Side Power Window

Manual opening/closing

To open the window to the desired position, lightly hold down the switch.
To close the window to the desired position, pull up the switch.

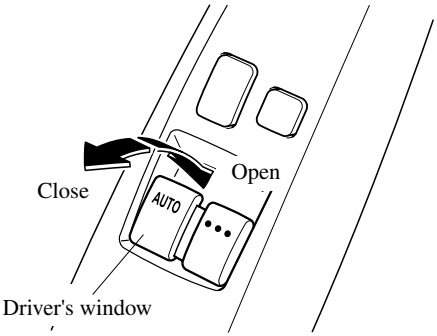

Auto-opening

To fully open the window automatically, press the switch completely down.

To stop the window partway, lightly pull up the switch and then release it.

▼Operating the Passenger Power Windows

The power window may be operated when the power window lock switch on the driver's door is in the unlocked position.

The passenger window may be opened or closed by the power window master control switches on the driver's door.

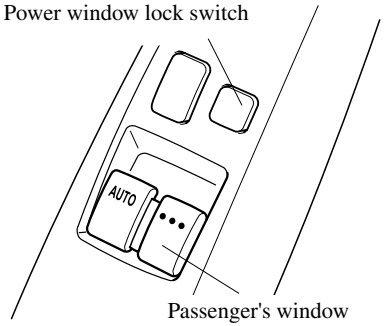

To open the window to the desired position, hold down the switch.
To close the window to the desired position, pull up the switch.

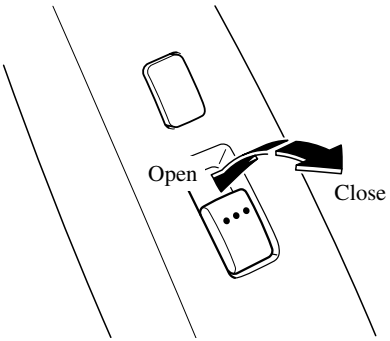

▼Power Window Lock Switch

With the lock switch in the unlocked position, all power windows on each door can be operated.

With the lock switch in the locked position, only the driver's side power window can be operated.

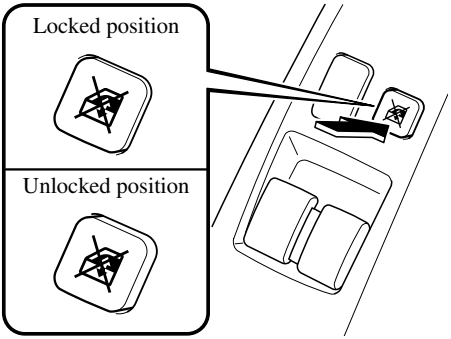

⚠ WARNING

Unless a passenger needs to operate a power window, keep the power window lock switch in the locked position:

Unintentional power window operation is dangerous. A person's hands, head, or neck could be caught by the window and result in serious injury.

Rear Quarter Windows

Open or close a swing-out rear quarter window by releasing the latch and moving the window.

NOTE

When parked in public areas, it is best to keep the rear quarter windows closed for security.

▼Opening a Window

Pull the latch inward and then push the window outward.

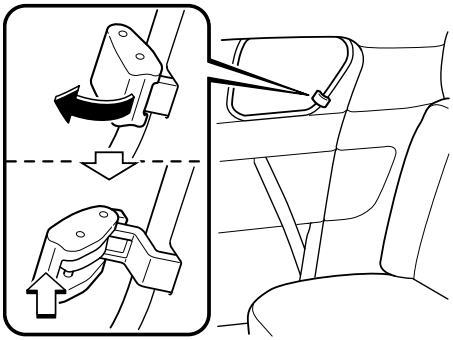

▼Closing a Window

Pull the latch inward and then push it backward until it snaps shut. Make sure the window is securely closed.

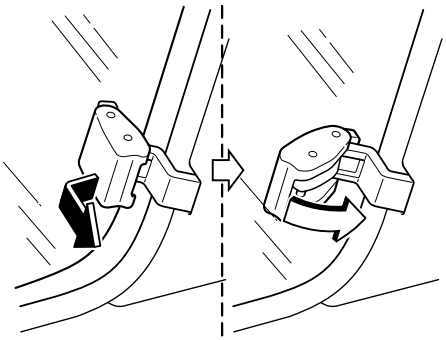

Fuel-Filler Lid and Cap

⚠ WARNING

When removing the fuel cap, loosen the cap slightly and wait for any hissing to stop. Then remove it:

Fuel spray is dangerous. Fuel can burn skin and eyes and cause illness if ingested. Fuel spray is released when there is pressure in the fuel tank and the fuel cap is removed too quickly.

Before refueling, stop the engine, and always keep sparks and flames away from the filler neck:

Fuel vapor is dangerous. It could be ignited by sparks or flames causing serious burns and injuries. Additionally, use of the incorrect fuel filler cap or not using a fuel filler cap may result in fuel leak, which could result in serious burns or death in an accident.

⚠ CAUTION

Always use only a genuine Mazda fuel cap or an approved equivalent, available at an Authorized Mazda Dealer. The wrong cap can result in a serious malfunction of the fuel and emission control systems. It may also cause the check engine light in the instrument cluster to illuminate.

▼Fuel-Filler Lid

To open, pull up the remote fuel-filler lid release.

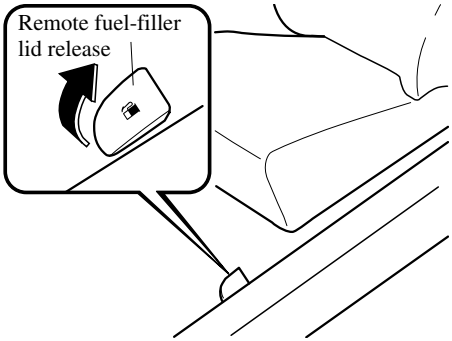

▼Fuel-Filler Cap

To remove the fuel-filler cap, turn it counterclockwise.

To close the fuel-filler cap, turn it clockwise until two or more clicks are heard.

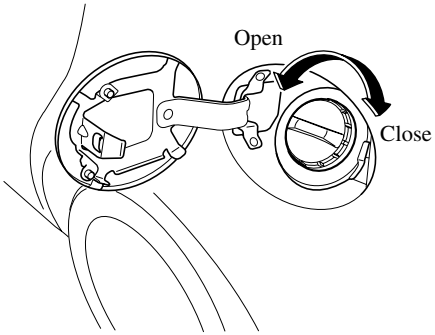

⚠ CAUTION

Make sure the fuel-filler cap is tightened securely. The check engine light may illuminate when the cap isn't tightened securely. If the light remains on (even after you have tightened the cap securely, driven, and restarted the engine several times), it may indicate a different problem. Contact an Authorized Mazda Dealer as soon as possible.

Hood

⚠ WARNING

Always check that the hood is closed and securely locked:

A hood that is not closed and securely locked is dangerous as it could fly open while the vehicle is moving and block the driver's vision which could result in a serious accident.

▼Opening the Hood

1. With the vehicle parked, pull the release handle to unlock the hood.

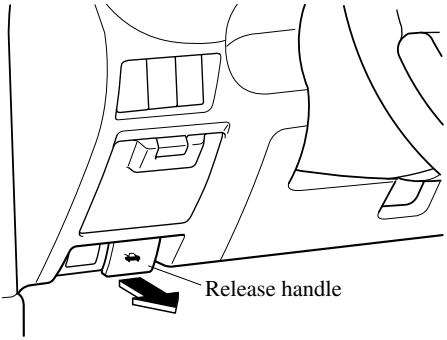

2. Insert your hand into the hood opening and slide the hood latch lever to the right and lift the hood.

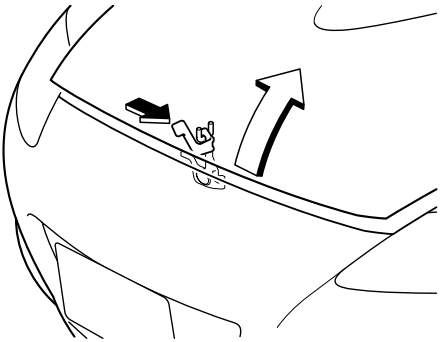

3. Grasp the support rod in the padded area and secure it in the stay hole indicated by the arrow to hold the hood open.

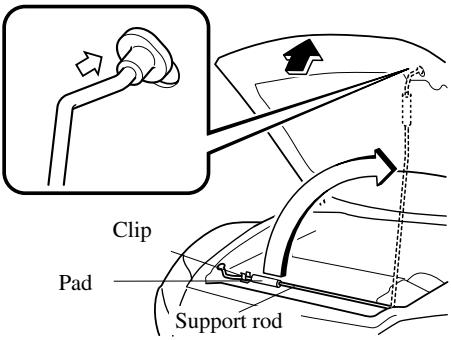

▼Closing the Hood

1. Check under the hood area to make certain all fuel-filler caps are in place and all loose items (e.g. tools, oil containers, etc.) have been removed.
2. Insert the support rod in its clip while holding up the hood. Verify that the support rod is secured in the clip before closing the hood.
3. Close the hood so that it locks securely.

Moonroof*

The moonroof can be opened or closed electrically only when the ignition switch is in the ON position.

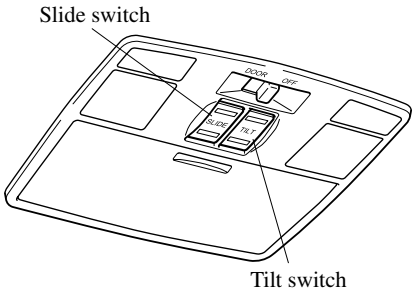

⚠ WARNING

Do not let passengers stand up or extend part of the body through the open moonroof while the vehicle is moving:

Extending the head, arms, or other parts of the body through the moonroof is dangerous. The head or arms could hit something while the vehicle is moving. This could cause serious injury or death.

Make sure the opening is clear before closing the moonroof:

A closing moonroof is dangerous. The hands, head, or even neck of a person —especially a child— could be caught in it as it closes, causing serious injury or even death.

NOTE

After washing your Mazda or after it rains, wipe the water off the moonroof before operating it to avoid water penetration which could cause rust and water damage to your headliner.

*Some models.

▼Tilt Operation

The rear of the moonroof can be tilted open to provide more ventilation.

To fully tilt automatically, momentarily press the rear of the tilt switch.
To stop tilting partway, press any part of the tilt or slide switch.

To close to the desired position, press the front of the tilt or slide switch.

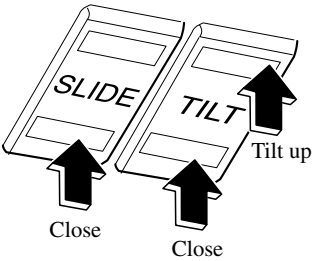

▼Slide Operation

To fully open automatically, momentarily press the rear of the slide switch.
To stop sliding partway, press any part of the tilt or slide switch.

To close to the desired position, press the front of the tilt or slide switch.

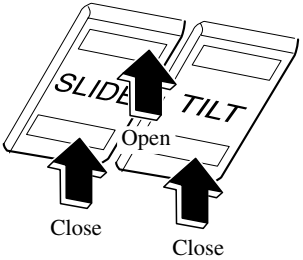

▼Sunshade

The sunshade can be opened and closed by hand.

The sunshade opens automatically when the moonroof is opened, but must be closed by hand.

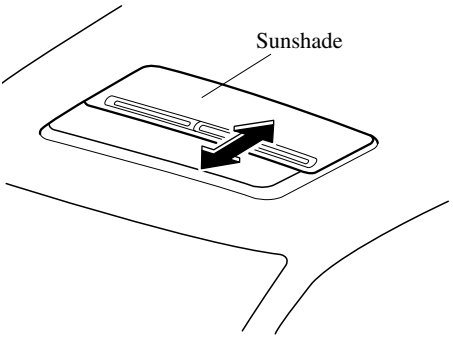

⚠ CAUTION

The sunshade does not tilt. To avoid damaging the sunshade, do not push up on it.

Immobilizer System (with Advanced Key)

The immobilizer system allows the engine to start only with an advanced key the system recognizes.

If someone attempts to start the engine with an unrecognized key, the engine will not start, thereby helping to prevent the theft of your vehicle.

⚠ CAUTION

- *Radio equipment like this is governed by laws in the United States.*
  Changes or modifications not expressly approved by the party responsible for compliance could void the user's authority to operate the equipment.
- *To avoid damage to the key, do not:*
  - *Drop the key.*
  - *Get the key wet.*
  - *Expose the key to any kind of magnetic field.*
  - *Expose the key to high temperatures on places such as the dashboard or hood, under direct sunlight.*

⚠ CAUTION

Do not allow the following when starting the engine with the auxiliary key due to an advanced key dead battery or other malfunction. Otherwise the signal from the auxiliary key will not be received correctly and the engine may not start.

- *Metal parts of other keys or metal objects touch the key grip.*
- *Spare auxiliary keys or keys for other vehicles equipped with an immobilizer system touch or come near the auxiliary key.*
- *Equipment containing electronic components or cards with magnetic strips such as credit cards come near the auxiliary key.*

NOTE

- ***(U.S.A.)***
  This device complies with Part 15 of the FCC Rules. Operation is subject to the following two conditions: (1) this device may not cause harmful interference, and (2) this device must accept any interference received, including interference that may cause undesired operation.
- ***(CANADA)***
  This device complies with RSS-210 of Industry CANADA. Operation is subject to the following two conditions: (1) this device may not cause interference, and (2) this device must accept any interference, including interference that may cause undesired operation of the device.

▼Operation

Arming

The system is armed when the ignition switch is turned from the ON position to the ACC or LOCK position. The security indicator light in the instrument cluster flashes every 2 seconds until the system is disarmed.

Disarming

The system is disarmed when the ignition switch is turned to the ON position with the registered advanced key.
The security indicator light illuminates for about 3 seconds and goes out.

If the engine doesn't start with the correct advanced key, and the security indicator light keeps illuminating or flashing, the system may have a malfunction. Consult an Authorized Mazda Dealer.

NOTE

- *The engine may not start and the security indicator light may illuminate or flash if the advanced key is placed in an area where it is difficult for the system to detect the signal, such as on the dashboard, or in the glove box. Move the advanced key to another place, turn the ignition switch to the LOCK position, and then restart the engine.*
- *Signals from a TV or radio station, or from a transceiver or a mobile telephone could interfere with your immobilizer system. If you are using the proper advanced key and the engine fails to start, check the security indicator light. If the indicator light is flashing, turn the ignition switch to the ACC or LOCK position and wait for a while, then restart the engine. If it doesn't start after 3 or more tries, contact an Authorized Mazda Dealer.*
- *If the security indicator light flashes continuously while you are driving, don't shut off the engine. Go to an Authorized Mazda Dealer and have it checked. If the engine is shut off while the indicator light is flashing, you won't be able to restart it.*
- *Since the electronic codes are reset when repairing the immobilizer system, the advanced key (including auxiliary key) are needed. Bring all the advanced keys (including auxiliary keys) to an Authorized Mazda Dealer.*

▼Maintenance

If you have a problem with the immobilizer system or the key, consult an Authorized Mazda Dealer.

NOTE

- *The advanced keys (including auxiliary key) carry a unique electronic code. For this reason, and to assure your safety, obtaining a replacement advanced key (including auxiliary key) requires some waiting time. They are only available through an Authorized Mazda Dealer.*
- *Always keep a spare advanced key in case one is lost. If an advanced key is lost, consult an Authorized Mazda Dealer as soon as possible.*
- *If you lose an advanced key (including auxiliary key), an Authorized Mazda Dealer will reset the electronic codes of your remaining advanced keys (including auxiliary keys) and immobilizer system. Bring all the remaining advanced keys (including auxiliary keys) to an Authorized Mazda Dealer to reset.*
  Starting the vehicle with a key that has not been reset is not possible.

▼Modification and Add-On Equipment

Mazda cannot guarantee the immobilizer system's operation if the system has been modified or if any add-on equipment has been installed to it.

⚠ CAUTION

To avoid damage to your vehicle, do not modify the system or install any add-on equipment to the immobilizer system or the vehicle.

Immobilizer System (without Advanced Key)

The immobilizer system allows the engine to start only with a key the system recognizes.

If someone attempts to start the engine with an unrecognized key, the engine will not start, thereby helping to prevent the theft of your vehicle.

⚠ CAUTION

- *Radio equipment like this is governed by laws in the United States.*
  Changes or modifications not expressly approved by the party responsible for compliance could void the user's authority to operate the equipment.
- *To avoid damage to the key, do not:*
  - *Drop the key.*
  - *Get the key wet.*
  - *Expose the key to any kind of magnetic field.*
  - *Expose the key to high temperatures on places such as the dashboard or hood, under direct sunlight.*

⚠ CAUTION

When starting the engine do not allow the following, as the engine may not start due to the electronic signal from the ignition key not being transmitted correctly.

- *A key ring rests on the key grip.*

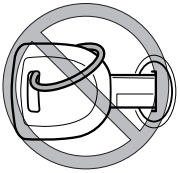

- *Metal parts of other keys or metal objects touch the key grip.*

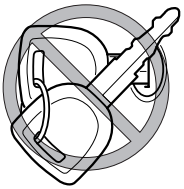

- *Spare keys or keys for other vehicles equipped with an immobilizer system touch or come near the key grip.*

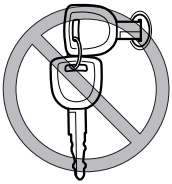

- *Devices for electronic purchases, or security passage touch or come near the key.*

NOTE

- ***(U.S.A.)***
  This device complies with Part 15 of the FCC Rules. Operation is subject to the following two conditions: (1) this device may not cause harmful interference, and (2) this device must accept any interference received, including interference that may cause undesired operation.
- ***(CANADA)***
  This device complies with RSS-210 of Industry CANADA. Operation is subject to the following two conditions: (1) this device may not cause interference, and (2) this device must accept any interference, including interference that may cause undesired operation of the device.

▼Operation

Arming

The system is armed when the ignition switch is turned from the ON to the ACC position.
The security indicator light in the instrument panel flashes every 2 seconds until the system is disarmed.

Disarming

The system is disarmed when the ignition switch is turned to the ON position with the correct ignition key.
The security indicator light illuminates for about 3 seconds and goes out.

If the engine doesn't start with the correct ignition key, and the security indicator light keeps illuminating or flashing, the system may have a malfunction. Consult an Authorized Mazda Dealer.

NOTE

- *If the security indicator light comes on and stays on when the ignition switch is turned to the ON position, the engine will not start.*
- *Signals from a TV or radio station, or from a transceiver or a mobile telephone, could interfere with your immobilizer system. If you are using the proper key and your engine fails to start, check the security indicator light. If it is flashing, remove the ignition key and wait 2 seconds or more, then reinsert it and try starting the engine again. If it doesn't start after 3 or more tries, contact an Authorized Mazda Dealer.*
- *If the security indicator light flashes continuously while you are driving, don't shut off the engine. Go to an Authorized Mazda Dealer and have it checked. If you shut off the engine while the light is flashing you won't be able to restart it.*
- *Since the electronic codes are reset when repairing the immobilizer system, the keys are needed. Bring all the existing keys to an Authorized Mazda Dealer.*

▼Maintenance

If you have a problem with the immobilizer system or the key, consult an Authorized Mazda Dealer.

NOTE

- *The keys carry a unique electronic code. For this reason, and to assure your safety, obtaining replacement key requires some waiting time. They are only available through an Authorized Mazda Dealer.*
- *Always keep a spare key, in case one is lost. If a key is lost, contact an Authorized Mazda Dealer as soon as possible.*
- *If you lose a key, an Authorized Mazda Dealer will reset the electronic codes of your remaining keys and immobilizer system. Bring all the remaining keys to an Authorized Mazda Dealer to reset. Starting the vehicle with a key that has not been reset is not possible.*

▼Modification and Add-On Equipment

Mazda cannot guarantee the immobilizer system's operation if the system has been modified or if any add-on equipment has been installed to it.

⚠ CAUTION

To avoid damage to your vehicle, do not modify the system or install any add-on equipment to the immobilizer system or the vehicle.

Theft-Deterrent System*

If the theft deterrent system detects an inappropriate entry into the vehicle, which could result in the vehicle or its contents being stolen, the alarm alerts the surrounding area of an abnormality by sounding the horn and flashing the hazard warning lights.
Refer to Operation on page 3-46.

NOTE

- *The theft-deterrent system operates with the key or the keyless entry system transmitter.*
- ***(With advanced key)***
  The theft-deterrent system can also be operated using a request switch or the start knob.
  The system operates only when the driver is in the vehicle or within operational range while the advanced key is being carried.
- *The system will not function unless it is properly armed. To properly secure the vehicle, always make sure all windows are completely closed and all doors and the trunk lid are locked before leaving the vehicle. Remember to take your key and transmitter.*

▼Operation

System triggering conditions

The horn sounds intermittently and the hazard warning lights flash for about 3 minutes when the system is triggered by any one of the following:

- Forcing open a door, the hood or the trunk lid.
- Unlocking a door with the inside door-lock knob.
- Unlocking a door with the door lock switch.
- Opening the hood by operating the hood release handle.
- Opening the trunk lid by operating the trunk lid release button.

If the system is triggered again, the lights and horn will activate until a door is unlocked or the trunk lid is opened with the key or with the transmitter.
(With advanced key)
The lights and horn can also be deactivated by pressing a request switch.

▼How to Arm the System

1. Remove the key from the ignition switch.
   (With advanced key)
   Turn the start knob to the LOCK position.
2. Make sure the hood and the trunk lid are closed. Close and lock all doors from the outside using the key or press the lock button on your keyless entry system transmitter.
   (With advanced key)
   Press a request switch or the lock button on the transmitter.

   (Without advanced key)
   The following method will also arm the theft-deterrent system:
   Close the hood and the trunk lid . Press the area on the door-lock switch marked “LOCK” once. Close all doors.

The hazard warning lights will flash once.

NOTE
Locking the doors with the inside door-lock knob will not arm the system.

*Some models.

▼To Turn off an Armed System

An armed system can be turned off by any one of the following methods:
- Unlock a door with the key.
- Press the unlock button on the keyless entry system transmitter.
- Insert the key into the ignition switch and turn it to the ON position.
- **(With advanced key)**
  - Press a request switch or the unlock button on the transmitter.
  - Turn the start knob to the ON position.

The hazard warning lights will flash twice to indicate that the system is turned off.

NOTE
The trunk lid can be opened with the key or the transmitter even when the system is armed. The alarm will not come on and the system will remain armed.

▼To Stop an Alarm

A triggered alarm can be turned off by any one of the following methods:
- Unlock a door with the key.
- Open the trunk lid with the key.
- Press the unlock button or press and hold the trunk button on the keyless entry system transmitter.
- **(With advanced key)**
  - Press a request switch.
  - Press the unlock button or press and hold the trunk button on the transmitter.

NOTE
If you have any problem with the theft-deterrent system, consult an Authorized Mazda Dealer.

▼Theft-Deterrent Labels

A label indicating that your vehicle is equipped with a Theft-Deterrent System is in the glove box.

Mazda recommends that you affix it to the lower rear corner of a front door window.

Steering Wheel

⚠ WARNING

Never adjust the steering wheel while the vehicle is moving:

Adjusting the steering wheel while the vehicle is moving is dangerous. Moving it can very easily cause the driver to abruptly turn to the left or right. This can lead to loss of control or an accident.

▼Tilt Steering Wheel

To change the angle of the steering wheel, stop the vehicle, pull the tilt wheel release lever under the steering column down, adjust the wheel, then push the release lever up to lock the column.

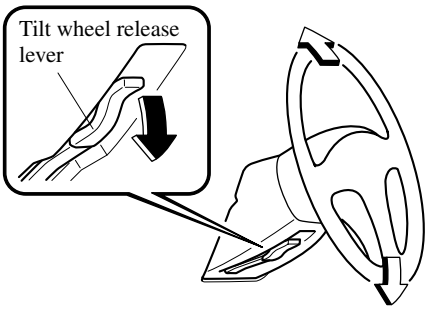

After adjusting, push the wheel up and down to be certain it's locked before driving.

Mirrors

▼Outside Mirrors

Check the mirror angles before driving.

Mirror type

Flat type (driver's side)
Flat surface mirror.
Convex type (front passenger side)
The mirror has single curvature on its surface.

⚠ WARNING

Be sure to look over your shoulder before changing lanes:

Changing lanes without taking into account the actual distance of the vehicle in the convex mirror is dangerous. You could have a serious accident. What you see in the convex mirror is closer than it appears.

Power mirror

The ignition switch must be in the ACC or ON position.

To adjust:

1. Press the left or right side of the selector switch to choose the left or right side mirror.

2. Depress the mirror switch in the appropriate direction.

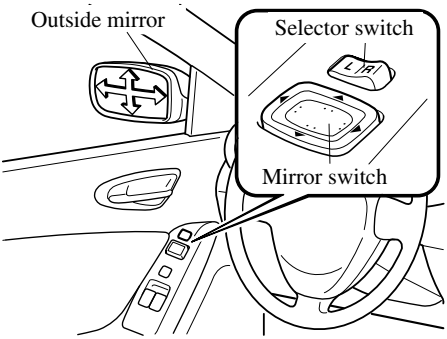

After adjusting the mirror, lock the control by placing the selector switch in the middle position.

Folding the mirror

Fold the outside mirror rearward until it is locked.

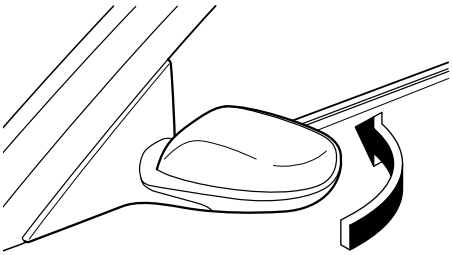

WARNING

Always return the outside mirrors to the driving position before you start driving:

Driving with the outside mirrors folded in is dangerous. Your rear view will be restricted, and you could have an accident.

Mirror defroster*

To turn on the mirror defrosters, turn the ignition switch to the ON position and push the rear window defroster switch (page 5-60).

▼Rearview Mirror

WARNING

Do not stack cargo or objects higher than the seatbacks:

Cargo stacked higher than the seatbacks is dangerous. It can block your view in the rearview mirror, which might cause you to hit another car when changing lanes.

Rearview mirror adjustment

Before driving, adjust the rearview mirror to center on the scene through the rear window.

Manual day/night mirror

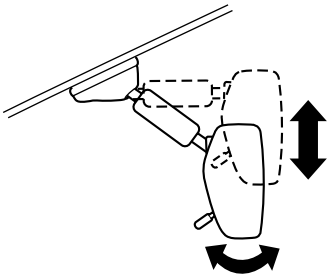

*Some models.

Auto-dimming mirror

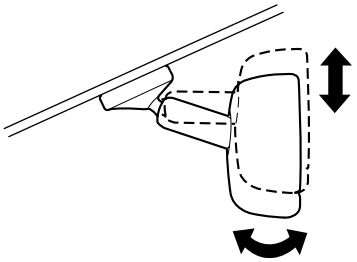

NOTE
For the manual day/night mirror, perform the adjustment with the day/night lever in the day position.

Reducing glare from headlights

Manual day/night mirror

Push the day/night lever forward for day driving. Pull it back to reduce glare of headlights from cars at the rear.

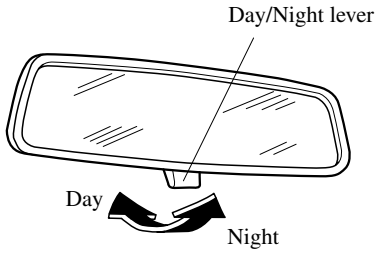

Auto-dimming mirror

The auto-dimming mirror automatically reduces glare of headlights from cars at the rear when the ignition switch is in the ON position.

Press the OFF button (○) to cancel the automatic dimming function. The indicator light will turn off.
To reactivate the automatic dimming function, press the ON button (|). The indicator light will illuminate.

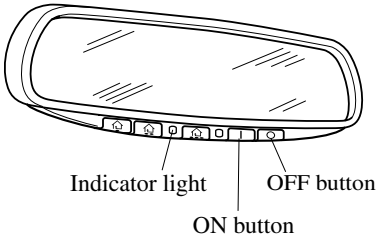

NOTE

- *Do not use glass cleaner or suspend objects on or around the light sensor. Otherwise, light sensor sensitivity will be affected and may not operate normally.*

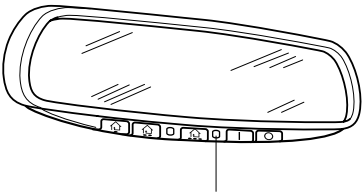

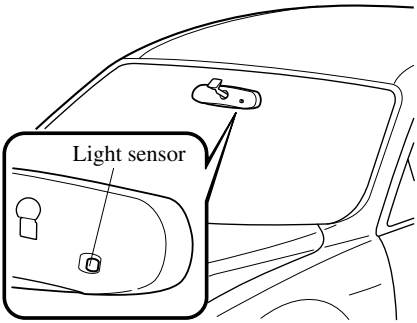

- *For information regarding the 3 buttons (, ,) on the auto-dimming mirror, refer to HomeLink Wireless Control System (page 5-61).*

4 Before Driving Your Mazda

Important information about driving your Mazda.

Fuel and Engine Exhaust Precautions 4-2
Fuel Requirements 4-2
Emission Control System 4-3
Engine Exhaust (Carbon Monoxide) 4-4

Before Starting the Engine 4-5
Before Getting In 4-5
After Getting In 4-5

Driving Tips 4-6
Break-In Period 4-6
Money-Saving Suggestions 4-6
Hazardous Driving 4-7
Rocking the Vehicle 4-7
Winter Driving 4-8
Driving In Flooded Area 4-9
Overloading 4-10

Towing 4-11
Trailer Towing 4-11

Fuel Requirements

Vehicles with catalytic converters or oxygen sensors must use ONLY UNLEADED FUEL, which will reduce exhaust emissions and keep spark plug fouling to a minimum.

Your Mazda will perform best with fuel listed in the table.

Fuel	Octane Rating* (Anti-knock index)
Premium unleaded fuel	91 [(R+M)/2 method] or above (96 RON or above)

* U.S. federal law requires that octane ratings be posted on gasoline station pumps.

This vehicle is designed to use 91[(R+M)/2 method] (96RON) or higher gasoline for best performance. If 91[(R+M)/2 method] (96RON) is not available, gasoline from 87 to 90[(R+M)/2 method] (91 to 95RON) can be used temporarily for emergency purposes, but this will slightly reduce performance. Fuel with gasoline from 87 to 90[(R+M)/2 method] (91 to 95RON), driving in high temperature or low humidity conditions could cause engine knocking.
Fuel with a rating lower than 87[(R+M)/2 method] (lower than 91RON) could cause the emission control system to lose effectiveness. It could also cause engine knocking and serious engine damage.

⚠ CAUTION

- *USE ONLY UNLEADED FUEL.*
  Leaded fuel is harmful to the catalytic converter and oxygen sensors and will lead to deterioration of the emission control system and or failures.
- *Your vehicle can only use oxygenated fuels containing no more than 10% ethanol by volume. Damage to your vehicle may occur when ethanol exceeds this recommendation, or if the gasoline contains any methanol. Stop using gasohol of any kind if your vehicle engine is performing poorly.*
- *Never add fuel system additives. Never add cleaning agents other than those specified by Mazda. Other cleaning agents and additives may damage the system. Consult an Authorized Mazda Dealer.*

Gasoline blended with oxygenates such as alcohol or ether compounds are generally referred to as oxygenated fuels. The common gasoline blend that can be used with your vehicle is ethanol blended at no more than 10%. Gasoline containing alcohol, such as ethanol or methanol, may be marketed under the name “Gasohol”.

Vehicle damage and drivability problems resulting from the use of the following may not be covered by the Mazda warranty.
- Gasohol containing more than 10% ethanol.
- Gasoline or gasohol containing methanol.
- Leaded fuel or leaded gasohol.

Emission Control System

Your vehicle is equipped with an emission control system (the catalytic converter is part of this system) that enables your vehicle to comply with existing exhaust emissions requirements.

WARNING

Never park over or near anything flammable:

Parking over or near anything flammable, such as dry grass, is dangerous. Even with the engine turned off, the exhaust system remains very hot after normal use and could ignite anything flammable. A resulting fire could cause serious injury or death.

CAUTION

Ignoring the following precautions could cause lead to accumulate on the catalyst inside the converter or cause the converter to get very hot. Either condition will damage the converter and cause poor performance.

- *USE ONLY UNLEADED FUEL.*
- *Don't drive your Mazda with any sign of engine malfunction.*
- *Don't coast with the ignition switch turned off.*
- *Don't descend steep grades in gear with the ignition switch turned off.*
- *Don't operate the engine at high idle for more than 2 minutes.*
- *Don't tamper with the emission control system. All inspections and adjustments must be made by a qualified technician.*
- *Don't push-start or pull-start your vehicle.*

NOTE

Under U.S. federal law, any modification to the original-equipment emission control system before the first sale and registration of a vehicle is subject to penalties. In some states, such modification made on a used vehicle is also subject to penalties.

NOTE

While the engine is off, the sound of a valve opening and closing can be heard from inside and outside of the cabin interior, however this does not indicate an abnormality. Your vehicle has a self-checking device and it operates while the engine is off.

Engine Exhaust (Carbon Monoxide)

WARNING

Do not drive your vehicle if you smell exhaust gas inside the vehicle:

Engine exhaust gas is dangerous. This gas contains carbon monoxide (CO), which is colorless, odorless, and poisonous. When inhaled, it can cause loss of consciousness and death. If you smell exhaust gas inside your vehicle, keep all windows fully open and contact an Authorized Mazda Dealer immediately.

Do not run the engine when inside an enclosed area:

Running the engine inside an enclosed area, such as a garage, is dangerous. Exhaust gas, which contains poisonous carbon monoxide, could easily enter the cabin. Loss of consciousness or even death could occur.

Open the windows or adjust the heating or cooling system to draw fresh air when idling the engine:

Exhaust gas is dangerous. When your vehicle is stopped with the windows closed and the engine running for a long time even in an open area, exhaust gas, which contains poisonous carbon monoxide, could enter the cabin. Loss of consciousness or even death could occur.

Clear snow from underneath and around your vehicle, particularly the tail pipe, before starting the engine:

Running the engine when a vehicle is stopped in deep snow is dangerous. The exhaust pipe could be blocked by the snow, allowing exhaust gas to enter the cabin. Because exhaust gas contains poisonous carbon monoxide, it could cause loss of consciousness or even death to occupants in the cabin.

Before Getting In

- Be sure the windows, outside mirrors, and outside lights are clean.
- Inspect inflation pressures and condition of tires.
- Look under the vehicle for any sign of fluid leaks.
- If you plan to back up, make sure nothing is in your way.

NOTE

Engine oil, engine coolant, brake/clutch fluid, washer fluid, and other fluid levels should be inspected. See Maintenance, Section 8.

After Getting In

- Are all doors closed and locked?
- Is the seat adjusted properly?
- Are the inside and outside mirrors adjusted?
- Is everyone's seat belt fastened?
- Check all gauges.
- Check all warning lights when the ignition switch is turned to the ON position.
- Release the parking brake and make sure the brake warning light goes off.

Always be thoroughly familiar with your Mazda.

Break-In Period

No special break-in is necessary, but a few precautions in the first 1,000 km (600 miles) may add to the performance, economy, and life of your Mazda.

- Don't race the engine.
- Don't maintain one constant speed, either slow or fast, for a long period of time.
- Don't drive constantly at full-throttle or high engine rpm (over 7,000 rpm) for extended periods of time.
- Avoid unnecessary hard stops.
- Avoid full-throttle starts.

Money-Saving Suggestions

How you operate your Mazda determines how far it will travel on a tank of fuel. Use these suggestions to help save money on fuel and repairs.

- Avoid long warm-ups. Once the engine runs smoothly, begin driving.
- Avoid fast starts.
- Keep the engine tuned. Follow the maintenance schedule (page 8-3) and have an Authorized Mazda Dealer perform inspections and servicing.
- Use the air conditioner only when necessary.
- Slow down on rough roads.
- Keep the tires properly inflated.
- Don't carry unnecessary weight.
- Don't rest your foot on the brake pedal while driving.
- Keep the wheels in correct alignment.
- Keep windows closed at high speeds.
- Slow down when driving in crosswinds and headwinds.

⚠ WARNING

Never stop the engine when going down a hill:

Stopping the engine when going down a hill is dangerous. This causes the loss of power steering and power brake control, and may cause damage to the drivetrain. Any loss of steering or braking control could cause an accident.

Hazardous Driving

WARNING

Be extremely careful if it is necessary to downshift on slippery surfaces:

Downshifting into lower gear while driving on slippery surfaces is dangerous. The sudden change in tire speed could cause the tires to skid. This could lead to loss of vehicle control and an accident.

Do not rely on ABS as a substitute for safe driving:

The ABS cannot compensate for unsafe and reckless driving, excessive speed, tailgating (following another vehicle too closely), driving on ice and snow, and hydroplaning (reduced tire friction and road contact because of water on the road surface). You can still have an accident.

When driving on ice or in water, snow, mud, sand, or similar hazards:

- Be cautious and allow extra distance for braking.
- Avoid sudden braking and sudden maneuvering.
- Do not pump the brakes. Continue to press down on the brake pedal. Refer to Anti-Lock Brake System (ABS) on page 5-8.
- If you get stuck, select a lower gear and accelerate slowly. Do not spin the rear wheels.
- For more traction in starting on slippery surfaces such as ice or packed snow, use sand, rock salt, chains, carpeting, or other nonslip material under the rear wheels.

NOTE

Use snow chains only on the rear wheels.

Rocking the Vehicle

WARNING

Do not spin the wheels at more than 56 km/h (35 mph), and do not allow anyone to stand behind a wheel when pushing the vehicle:

When the vehicle is stuck, spinning the wheels at high speed is dangerous. The spinning tire could overheat and explode. This could cause serious injuries.

CAUTION

Too much rocking may cause engine overheating, transmission failure, and tire damage.

If you must rock the vehicle to free it from snow, sand or mud, depress the accelerator slightly and slowly move the shift lever from 1 (D) to R.

Winter Driving

- Carry emergency gear, including tire chains, window scraper, flares, a small shovel, jumper cables, and a small bag of sand or salt.

Ask an Authorized Mazda Dealer to perform the following precautions:

- Have the proper ratio of antifreeze in the radiator.
  Refer to Engine Coolant on page 8-13.
- Inspect the battery and its cables. Cold reduces battery capacity.
- Inspect the ignition system for damage and loose connections.
- Use washer fluid made with antifreeze—but don't use engine coolant antifreeze for washer fluid (page 8-16).
- Don't use the parking brake in freezing weather as the parking brake may freeze. Instead, shift to P with an automatic transmission and to 1 or R with a manual transmission. Block the rear wheels.

▼Snow Tires

Use snow tires on all four wheels

Don't go faster than 120 km/h (75 mph) while driving with snow tires. Inflate snow tires 30 kPa (0.3 kgf/cm^2, 4.3 psi) more than recommended on the tire pressure label (rear door on the driver's side), but never more than the maximum cold-tire pressure shown on the tires.
Your vehicle is originally equipped with summer tires designed for optimum traction on wet and dry roads. If your vehicle is to be used on snow and ice covered roads, Mazda recommends that you replace the tires originally equipped on your vehicle with snow tires during the winter months.

⚠ WARNING

Use only the same size and type tires (snow, radial, or non-radial) on all four wheels:

Using tires different in size or type is dangerous. Your vehicle's handling could be greatly affected and result in an accident.

⚠ CAUTION

Check local regulations before using studded tires.

NOTE

If your vehicle is equipped with the tire pressure monitoring system, the system may not function correctly when using tires with steel wire reinforcement in the sidewalls (page 5-31).

▼Tire Chains

Check local regulations before using tire chains.

⚠ CAUTION

- *Chains may affect handling.*
- *Do not go faster than 50 km/h (30 mph) or the chain manufacturer's recommended limit, whichever is lower.*
- *Drive carefully and avoid bumps, holes, and sharp turns.*
- *Avoid locked-wheel braking.*
- *Do not use chains on a temporary spare tire; it may result in damage to the vehicle and to the tire. Your vehicle is not equipped with a factory installed temporary spare tire.*
- *Do not use chains on roads that are free of snow or ice. The tires and chains could be damaged.*
- *Chains may scratch or chip aluminum wheels.*

NOTE

If your vehicle is equipped with the tire pressure monitoring system, the system may not function correctly when using tire chains.

Install the chains on the rear tires.
Do not use chains on the front tires.
Use only SAE Class “S” chains, and make sure they fit.

Installing the chains

1. Secure the chains on the rear tires as tightly as possible. Always follow the chain manufacturer's instructions.
2. Retighten the chains after driving 1/2—1 km (1/4—1/2 mile).

Driving In Flooded Area

⚠ WARNING

Dry wet brakes by driving very slowly and applying the brakes lightly until brake performance returns to normal:

Driving with wet brakes is dangerous. Increased stopping distance or the vehicle pulling to one side when braking could result in a serious accident. Light braking will indicate whether the brakes have been affected.

⚠ CAUTION

Do not drive the vehicle on flooded roads as it could cause short circuiting of electrical/electronic parts, or engine damage or stalling from water absorption. If the vehicle has been immersed in water, consult an Authorized Mazda Dealer.

Overloading

WARNING

Be careful not to overload your vehicle:
The gross axle weight rating (GAWR) and the gross vehicle weight rating (GVWR) of your vehicle are on the Motor Vehicle Safety Standard Label on the driver's door frame. Exceeding these ratings can cause an accident or vehicle damage. You can estimate the weight of your load by weighing the items (or people) before putting them in the vehicle.

Trailer Towing

The Mazda RX-8 is not designed for towing. Never tow a trailer with your Mazda RX-8.

5 Driving Your Mazda

Explanation of instruments and controls.

Starting and Driving 5-2
Ignition Switch 5-2
Starting the Engine 5-4
Brake System 5-5
Manual Transmission Operation 5-10
Automatic Transmission Controls 5-12
Power Steering 5-19
Cruise Control 5-20
Traction Control System (TCS)* 5-23
Dynamic Stability Control (DSC)* 5-24
Tire Pressure Monitoring System* 5-27

Instrument Cluster and Indicators 5-33
Meters and Gauges 5-33

Warning/Indicator Lights and Beep Sounds 5-39
Warning/Indicator Lights 5-39
Beep Sounds 5-53

Switches and Controls 5-55
Lighting Control 5-55
Turn and Lane-Change Signals 5-57
Fog Lights* 5-57
Windshield Wipers and Washer 5-58
Headlight Washer* 5-59
Rear Window Defroster 5-60
Horn 5-60
Hazard Warning Flasher 5-61
HomeLink Wireless Control System* 5-61

*Some models.

Ignition Switch

Auxiliary key (with advanced key)

NOTE
When starting the engine using the advanced key, refer to Starting the Engine (page 3-9).

When starting the engine with the auxiliary key, perform the following procedure.

1. Remove the auxiliary key from the advanced key (page 3-15).
2. Make sure the start knob is in LOCK position.
3. Remove the start knob by pulling it outward while pressing the buttons on both the left and right sides.

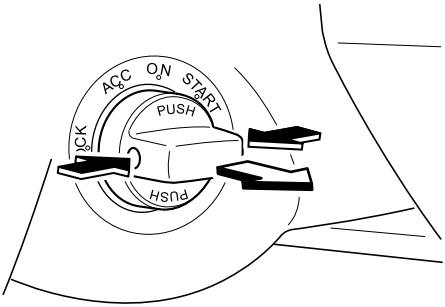

4. Insert the auxiliary key in the ignition switch.

▼Ignition Switch Positions

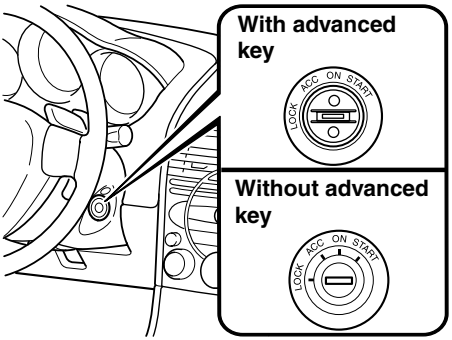

LOCK

The steering wheel locks to protect against theft. Only in this position can the key be removed.

Manual transmission

To turn the key from the ACC to the LOCK position, push the key in at the ACC position, then turn it to the LOCK position.

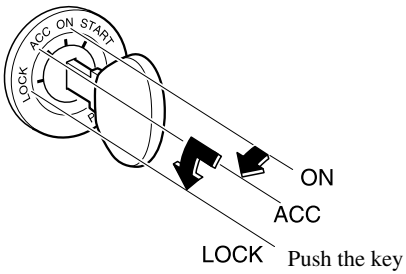

Automatic transmission

To turn the key from the ACC to the LOCK position, the shift lever must be in the P position.

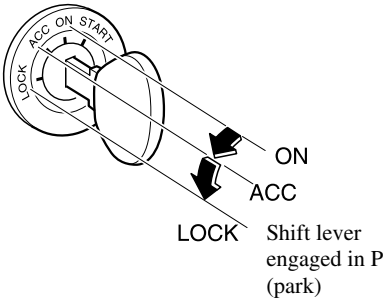

WARNING

Remove the key only when the vehicle is parked:

Removing the key from the ignition switch while the vehicle is moving is dangerous. Removing the key allows the steering wheel to lock. You will lose steering control and a serious accident could occur. (For vehicles equipped with the advanced key, the steering wheel locks when the starter knob is turned to the LOCK position.)

Before leaving the driver's seat, always put the key or start knob to LOCK position, set the parking brake and make sure the shift lever is in P with an automatic transmission or in 1 or R with a manual transmission:

Intentionally placing the key or start knob into LOCK position is much more important where you will not be removing the key to leave the vehicle and because leaving it in other positions will disable some of the vehicle security systems and run the battery down.

Leaving the driver's seat without putting the ignition switch in LOCK position, setting the parking brake and the shift lever is in P with an automatic transmission or in 1 or R with a manual transmission is dangerous. Unexpected vehicle movement could occur. This could cause an accident.

NOTE

If turning the key is difficult, jiggle the steering wheel from side to side.

Leaving the key or start knob in any position but LOCK position also disables some of the security features and may run the battery down.

ACC (Accessory)

The steering wheel unlocks and some electrical accessories will operate.

ON

This is the normal running position after the engine is started. The warning lights (except brakes) should be inspected before the engine is started (page 5-39).

NOTE

(With headlight auto-leveling)

When the ignition switch is turned to the ON position, the sound of the headlight leveling motors operating at the front of the engine compartment can be heard. This does not indicate an abnormality.

START

The engine is started in this position. It will crank until you release the key; then it returns to the ON position. The brake warning light can be checked after the engine is started (page 5-39).

▼Ignition Key Reminder

If the ignition switch is in the LOCK or ACC position with the key inserted, a continuous beep sound will be heard when the driver's door is opened.

Starting the Engine

NOTE

Engine-starting is controlled by the spark ignition system.
This system meets all Canadian Interference-Causing Equipment Standard requirements regulating the impulse electrical field strength of radio noise.

1. Occupants should fasten their seat belts.
2. Make sure the parking brake is on.
3. Depress the brake pedal.
4. **(Manual transmission)**
   Depress the clutch pedal all the way and shift into neutral.
   Keep the clutch pedal depressed while cranking the engine.

   (Automatic transmission)
   Put the vehicle in park (P). If you must restart the engine while the vehicle is moving, shift into neutral (N).

NOTE

(Manual transmission)

*The starter will not operate if the clutch pedal is **not** depressed all the way.*

(Automatic transmission)

*The starter will not operate if the shift lever is **not** in P or N.*

5. Turn the ignition switch to the START position and hold (up to 10 seconds at a time) until the engine starts.

⚠ CAUTION

Don't try the starter for more than 10 seconds at a time. If the engine stalls or fails to start, wait 10 seconds before trying again. Otherwise, you may damage the starter and drain the battery.

6. After starting the engine, let it idle for about 10 seconds.

NOTE

- *In extremely cold weather or after the vehicle has not been driven in several days, let the engine warm up without operating the accelerator.*
- *Whether the engine is cold or warm, it should be started without use of the accelerator.*
- *To protect the engine, when the engine coolant temperature is low, the engine does not run at high speeds. The fuel supply will be cut at an rpm lower than the red zone.*

Brake System

▼Foot Brake

Your Mazda has power-assisted brakes that adjust automatically through normal use.

Should power-assist fail, you can stop by applying greater force than normal to the brake pedal. But the distance required to stop will be greater than usual.

WARNING

Do not coast with the engine stalled or turned off, find a safe place to stop:

Coasting with the engine stalled or turned off is dangerous. Braking will require more effort, and the brake's power-assist could be depleted if you pump the brake. This will cause longer stopping distances or even an accident.

Shift to a lower gear when going down steep hills:

Driving with your foot continuously on the brake pedal or steadily applying the brakes for long distances is dangerous. This causes overheated brakes, resulting in longer stopping distances or even total brake failure. This could cause loss of vehicle control and a serious accident. Avoid continuous application of the brakes.

Dry brakes that have become wet by driving very slowly and applying the brakes lightly until brake performance is normal:

Driving with wet brakes is dangerous. Increased stopping distance or the vehicle pulling to one side when braking could result in a serious accident. Light braking will indicate whether the brakes have been affected.

▼Parking Brake

WARNING

Before leaving the driver's seat, always put the key or start knob to LOCK position, set the parking brake and make sure the shift lever is in P with an automatic transmission or in 1 or R with a manual transmission:

Intentionally placing the key or start knob into LOCK position is much more important where you will not be removing the key to leave the vehicle and because leaving it in other positions will disable some of the vehicle security systems and run the battery down.
Leaving the driver's seat without putting the ignition switch in LOCK position, setting the parking brake and the shift lever is in P with an automatic transmission or in 1 or R with a manual transmission is dangerous. Unexpected vehicle movement could occur. This could cause an accident.

CAUTION

Driving with the parking brake on will cause excessive wear of the brake linings or pads.

NOTE

For parking in snow, refer to Winter Driving (page 4-8) regarding parking brake use.

Setting the parking brake

Depress the brake pedal and then firmly pull the parking brake lever fully upwards with a greater amount of force than is required so that the vehicle holds in the stationary position.

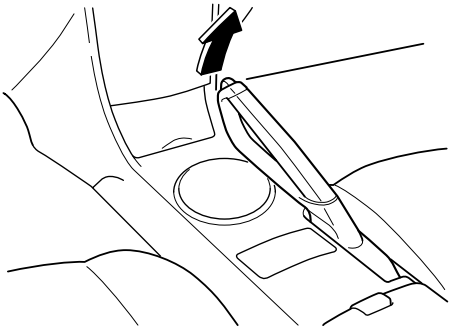

Releasing the parking brake

Depress the brake pedal and pull the parking brake lever upwards, then press the release button. While holding the button, lower the parking brake lever all the way down to the released position.

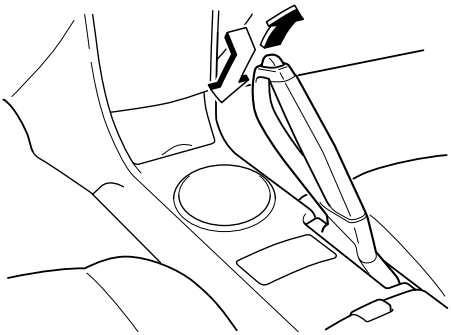

▼Brake System Warning Light

This warning has the following functions:

Parking brake warning

The light comes on when the parking brake is applied with the ignition switch in the START or ON position. It turns off when the parking brake is fully released.

Low brake fluid level warning

If the light stays on after the parking brake is fully released, you may have a brake problem.

Drive to the side of the road and park off the right-of-way.

You may notice that the pedal is harder to push or that it may go closer to the floor. In either case, it will take longer to stop the vehicle.

1. With the engine stopped, check the brake fluid level immediately and add fluid as required (page 8-15).
2. After adding fluid, check the light again.

If the warning light remains on, or if the brakes do not operate properly, do not drive the vehicle. Have it towed to an Authorized Mazda Dealer.

Even if the light goes out have your brake system inspected as soon as possible by an Authorized Mazda Dealer.

NOTE
Having to add brake fluid is sometimes an indicator of leakage. Consult an Authorized Mazda Dealer as soon as possible even if the brake light is no longer illuminated.

⚠ WARNING

Do not drive with the brake system warning light illuminated. Contact an Authorized Mazda Dealer to have the brakes inspected as soon as possible:
Driving with the brake system warning light illuminated is dangerous. It indicates that your brakes may not work at all or that they could completely fail at any time. If this light remains illuminated, after checking that the parking brake is fully released, have the brakes inspected immediately.

▼Anti-Lock Brake System (ABS)

The ABS control unit continuously monitors the speed of each wheel. If one is about to lock up, the ABS responds by automatically releasing and reapplying that wheel's brake.

The driver will feel a slight vibration in the brake pedal and may hear a chattering noise from the brake system. This is normal when the ABS operates. Don't pump the brakes, continue to press down on the brake pedal.

⚠ WARNING

Do not rely on ABS as a substitute for safe driving:
The ABS cannot compensate for unsafe and reckless driving, excessive speed, tailgating (following another vehicle too closely), driving on ice and snow, and hydroplaning (reduced tire friction and road contact because of water on the road surface). You can still have an accident.

NOTE
- *Braking distances may be longer on loose surfaces (snow or gravel, for example) which usually have a hard foundation. A vehicle with a normal braking system may require less distance to stop under these conditions because the tires will build up a wedge of surface layer when the wheels skid.*
- *The sound of the ABS operating may be heard when starting the engine or immediately after starting the vehicle. However, it does not indicate a malfunction.*

▼ABS Warning Light

The warning light stays on for a few seconds when the ignition switch is turned to the ON position.

If the ABS warning light stays on while you're driving, the ABS control unit has detected a system malfunction. If this occurs, your brakes will function normally as if the vehicle had no ABS.
Should this happen, consult an Authorized Mazda Dealer as soon as possible.

NOTE
When the engine is jump-started to charge the battery, uneven rpm occurs and the ABS warning light comes on. This is due to a weak battery, not a malfunction.
Recharge the battery.

▼Electronic Brake Force Distribution System Warning

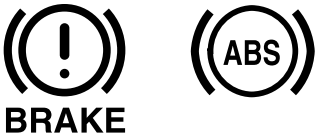

If the electronic brake force distribution control unit determines that some components are operating incorrectly, the control unit may turn the brake system warning light and the ABS warning light on at the same time. The problem is likely to be the electronic brake force distribution system.

⚠ WARNING

Do not drive with both the ABS warning light and brake warning light illuminated. Have the vehicle towed to an Authorized Mazda Dealer to have the brakes inspected as soon as possible:

Driving when the brake system warning light and ABS warning light are illuminated at the same time is dangerous.
When both lights are illuminated, the rear wheels could lock more quickly in an emergency stop than under normal circumstances.

▼Brake Pad Wear Indicator

When the disc brake pads become worn, the built-in wear indicators contact the disc plates. This causes a screeching noise to warn that the pads should be replaced.

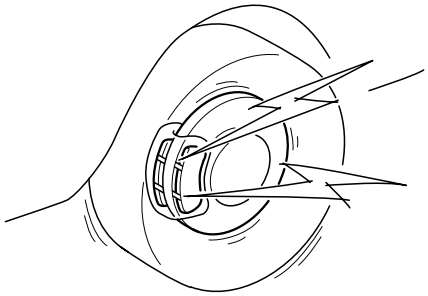

When you hear this noise, consult an Authorized Mazda Dealer as soon as possible.

WARNING

Do not drive with worn disc pads:
Driving with worn disc pads is dangerous. The brakes could fail and cause a serious accident. As soon as you hear a screeching noise consult an Authorized Mazda Dealer.

Manual Transmission Operation

▼Manual Transmission Shift Pattern

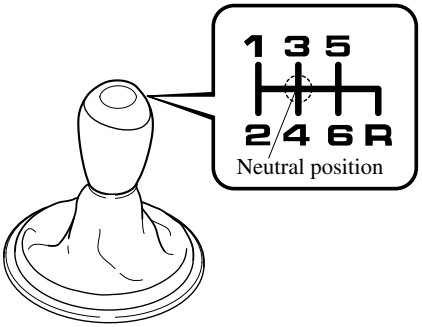

The shift pattern of the transmission is conventional, as shown.

Depress the clutch pedal all the way down while shifting; then release it slowly.

Your vehicle is equipped with a device to prevent shifting to R (reverse) by mistake. Push the shift lever downward and shift to R.

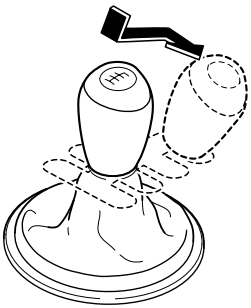

WARNING

Do not use sudden engine braking on slippery road surfaces or at high speeds:

Shifting down while driving on wet, snowy, or frozen roads, or while driving at high speeds causes sudden engine braking, which is dangerous. The sudden change in tire speed could cause the tires to skid. This could lead to loss of vehicle control and an accident.

Be sure to leave the shift lever in 1 or R position and set the parking brake when leaving the vehicle unattended:

Otherwise the vehicle could move and cause an accident.

CAUTION

- *Keep your foot off the clutch pedal except when shifting gears. Also, don't use the clutch to hold the vehicle on an upgrade. Riding the clutch will cause needless clutch wear and damage.*
- *Make sure the vehicle comes to a complete stop before shifting to R. Shifting to R while the vehicle is still moving may damage the transmission.*

NOTE

If shifting to R is difficult, shift back into neutral, release the clutch pedal, and try again.

▼Recommendations for Shifting

Upshifting

For normal acceleration, we recommend these shift points.

Gear	Vehicle speed
1 to 2	23 km/h (14 mph)
2 to 3	35 km/h (22 mph)
3 to 4	47 km/h (29 mph)
4 to 5	58 km/h (36 mph)
5 to 6	74 km/h (46 mph)

For cruising

Gear	Vehicle speed
1 to 2	23 km/h (14 mph)
2 to 3	34 km/h (21 mph)
3 to 4	45 km/h (28 mph)
4 to 5	56 km/h (35 mph)
5 to 6	68 km/h (42 mph)

Downshifting

When you must slow down in heavy traffic or on a steep **upgrade**, downshift before the engine starts to overwork. This reduces the chance of stalling and gives better acceleration when you need more speed.
On a steep **downgrade**, downshifting helps maintain safe speed and prolongs brake life.

Automatic Transmission Controls

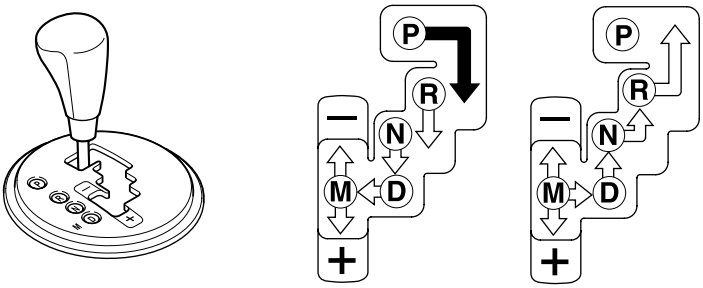

Various Lockouts:

➡ Indicates that you must depress the brake pedal to shift (The ignition switch must be in the ACC or ON position).

⇨ Indicates the shift lever can be shifted freely into any position.

NOTE

This Sport AT has an option that is not included in traditional automatic transmission - giving the driver the option of selecting each gear instead of leaving it to the transmission to shift gears. Even if you intend to use the automatic transmission functions as a traditional automatic, you should also be aware that you can inadvertently shift into manual shift mode and an inappropriate gear may be retained as you change speeds. If you notice the engine speed going higher or hear the engine racing, confirm you have not accidentally slipped into manual shift mode (page 5-14).

▼Transmission Ranges

The shift lever must be in P or N to operate the starter.

P (Park)

P locks the transmission and prevents the rear wheels from rotating.

⚠ WARNING

Always set the shift lever to P and set the parking brake:

Only setting the shift lever to the P position without using the parking brake to hold the vehicle is dangerous. If P fails to hold, the vehicle could move and cause an accident.

⚠ CAUTION

- *Shifting into P, N or R while the vehicle is moving can damage your transmission.*
- *Shifting into a driving gear or reverse when the engine is running faster than idle can damage the transmission.*

R (Reverse)

In position R, the vehicle moves only backward. You must be at a complete stop before shifting to or from R, except under rare circumstances as explained in Rocking the Vehicle (page 4-7).

N (Neutral)

In N, the wheels and transmission are not locked. The vehicle will roll freely even on the slightest incline unless the parking brake or brakes are on.

⚠ WARNING

If the engine is running faster than idle, do not shift from N or P into a driving gear:

It's dangerous to shift from N or P into a driving gear when the engine is running faster than idle. If this is done, the vehicle could move suddenly, causing an accident or serious injury.

Do not shift into N when driving the vehicle:

Shifting into N while driving is dangerous. Engine braking cannot be applied when decelerating which could lead to an accident or serious injury.

⚠ CAUTION

Do not shift into N when driving the vehicle. Doing so can cause transmission damage.

NOTE

Apply the parking brake or depress the brake pedal before moving the shift lever from N to prevent the vehicle from moving unexpectedly.

D (Drive)

D is the normal driving position. From a stop, the transmission will automatically shift through a 6-gear sequence.

M (Manual)

M is the manual shift mode position. Gears can be shifted up or down by operating the shift lever or steering shift switches.
Refer to Manual Shift Mode (page 5-14).

▼Active Adaptive Shift (AAS)

Active Adaptive Shift (AAS) automatically controls the transmission shift points to best suit the road conditions and driver input. This optimizes engine performance and improves driving comfort. When cornering the vehicle, AAS mode will hold the transmission in the gear the vehicle was in before entering the curve, allowing the vehicle to be accelerated from the same gear after exiting the curve.
If the driver accelerates rapidly, or accelerates and decelerates rapidly by operating the accelerator and brake pedal for a certain period of time while the selector lever is in the D position, AAS mode could activate. When this occurs, AAS mode will maintain the transmission in the optimum gear and the driver may sense that the transmission is not shifting, however this does not indicate an abnormality.

▼Shift-Lock System

The shift-lock system prevents shifting out of P unless the brake pedal is depressed.

To shift from P:

1. Depress and hold the brake pedal.
2. Start the engine.
3. Move the shift lever.

NOTE

- *When the ignition switch is in the LOCK position, the shift lever cannot be shifted from P.*
- *To be sure the vehicle is in park,* ***the ignition key cannot be removed unless the shift lever is in P.***
- ***(With Advanced Key)***
  The ignition switch cannot be turned from the ACC to the LOCK position when the shift lever is not in P.

▼Manual Shift Mode

This mode gives you the feel of driving a manual transmission vehicle by operating the shift lever and allows you to control engine rpm and torque the rear wheels much like a manual transmission when more control is desired.

To change to manual shift mode, shift the lever from D to M.

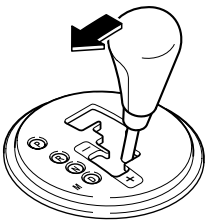

To return to automatic shift mode, shift the lever from M to D.

NOTE

If you change to manual shift mode when the vehicle is stopped, the gear will shift to M1.

Indicators

Shift position indicator

In manual shift mode, the “M” of the shift position indicator in the instrument panel illuminates.

Gear position indicator

The numeral for the selected gear illuminates.

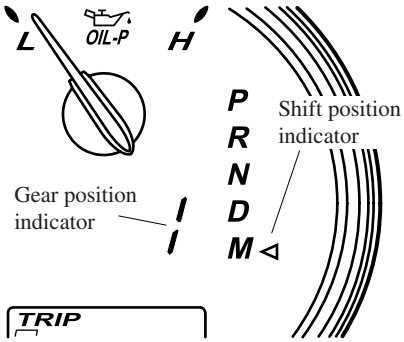

NOTE

- *If the gears cannot be shifted down when driving at higher speeds, the gear position indicator will flash twice to signal that the gears cannot be shifted down.*
- *If the automatic transmission fluid (ATF) temperature becomes too high, there is the possibility that the transmission will switch to automatic shift mode, canceling manual shift mode and turning off the gear position indicator illumination. This is a normal function to protect the AT. After the ATF temperature has decreased, the gear position indicator illumination turns back on and driving in manual shift mode is restored.*

Shifting

You can shift gears up and down by operating the shift lever or the steering shift switches.

NOTE

- *If the steering shift switches on both sides (left and right) are operated simultaneously, the gear will shift once.*
- *The gear will not shift if:*
  - *The steering shift switch and the shift lever are operated simultaneously.*
  - *The UP switch and DOWN switch are operated simultaneously.*

Manually Shifting up

(M1→M2→M3→M4→M5→M6)

To shift up to a higher gear, tap the shift lever back (+) once.

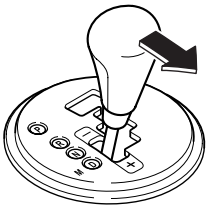

To shift up to a higher gear with the steering shift switches, tap either of the UP switches toward you once with your fingers.

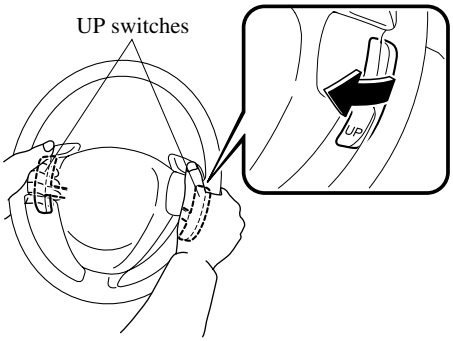

WARNING

Keep your hands on the steering wheel rim when using fingers or thumbs on the steering shift switches:

Putting your hands inside the rim of the steering wheel when using the steering shift switches is dangerous. If the driver air bag were to deploy in a collision, your hands could be impacted causing injury.

NOTE

- *When driving slowly, the gears may not shift up depending on vehicle speed.*
- *In manual shift mode, gears do not shift up automatically. Don't run the engine with the tachometer needle in the RED ZONE. If the tachometer needle enters the RED ZONE, you may feel engine-braking because the fuel delivery will be stopped to protect the engine. However, this does not indicate an abnormality.*
- *When depressing the accelerator fully, the transmission will shift to a lower gear, depending on vehicle speed.*

Manually Shifting down

(M6→M5→M4→M3→M2→M1)

To shift down to a lower gear, tap the shift lever forward (**−**) once.

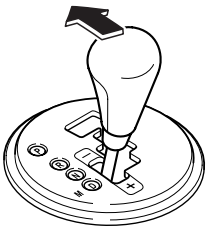

To shift down to a lower gear with the steering shift switches, press either of the DOWN switches away from you once with your thumb.

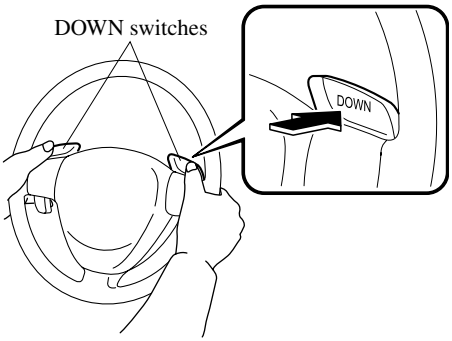

WARNING

Do not use engine braking on slippery road surfaces or at high speeds:

Shifting down while driving on wet, snowy, or frozen roads, or while driving at high speeds causes sudden engine braking, which is dangerous. The sudden change in tire speed could cause the tires to skid. This could lead to loss of vehicle control and an accident.

Keep your hands on the steering wheel rim when using fingers or thumbs on the steering shift switches:

Putting your hands inside the rim of the steering wheel when using the steering shift switches is dangerous. If the driver air bag were to deploy in a collision, your hands could be impacted causing injury.

NOTE

- *When driving at high speeds, the gear may not shift down depending on vehicle speed.*
- *During deceleration, the gear may automatically shift down depending on vehicle speed.*
- *When depressing the accelerator fully, the transmission will shift to a lower gear, depending on vehicle speed.*

Second gear fixed mode

When the shift lever is tapped back (+) while the vehicle is stopped, the transmission is set in the second gear fixed mode. The gear is fixed in second while in this mode for easier starting and driving on slippery roads. If the shift lever is tapped back (+) or forward (−) while in the second gear fixed mode, the mode will be canceled.

Shifting specification

Shifting up

If the vehicle speed is lower than the speed specified for each gear, the gear cannot be shifted up to a higher gear.

Gear	Vehicle speed
M1→M2	Between 0 and 18 km/h (0 and 11 mph), depending on how much the accelerator pedal is depressed.
M2→M3	Between 20 and 33 km/h (13 and 21 mph), depending on how much the accelerator pedal is depressed.
M3→M4	Between 30 and 33 km/h (19 and 21 mph), depending on how much the accelerator pedal is depressed.
M4→M5	43 km/h (27 mph)
M5→M6	65 km/h (41 mph)

Shifting down

If the vehicle speed is higher than the speed specified for each gear, the gear cannot be shifted down to a lower gear.

Gear	Vehicle speed
M6→M5	210 km/h (130 mph)
M5→M4	175 km/h (108 mph)
M4→M3	Between 122 and 135 km/h (75 and 83 mph), depending on how much the accelerator pedal is depressed.
M3→M2	Between 77 and 90 km/h (47 and 59 mph), depending on how much the accelerator pedal is depressed.
M2→M1	30 km/h (18 mph)

During deceleration, the gears shift down automatically when speed is reduced to the following:

Gear	Vehicle speed
M6→M5	60 km/h (37 mph)
M5→M4	40 km/h (24 mph)
M4→M3	26 km/h (16 mph)
M3→M2	18 km/h (11 mph)
M2→M1	12 km/h (7 mph)

NOTE

The gear does not shift down to M1 automatically while in the second gear fixed mode.

If the vehicle is kicked down at the following speeds or lower, the gears shift down automatically:

Gear	Vehicle speed
M6→M5	210 km/h (130 mph)
M6→M4	175 km/h (108 mph)
M5→M4	175 km/h (108 mph)

Recommendations for shifting

Upshifting

For normal acceleration, we recommend these shift points.

Gear	Vehicle speed
M1 to M2	19 km/h (12 mph)
M2 to M3	35 km/h (22 mph)
M3 to M4	47 km/h (29 mph)
M4 to M5	58 km/h (36 mph)
M5 to M6	78 km/h (49 mph)

For cruising

Gear	Vehicle speed
M1 to M2	5 km/h (3 mph)
M2 to M3	30 km/h (19 mph)
M3 to M4	40 km/h (25 mph)
M4 to M5	50 km/h (31 mph)
M5 to M6	67 km/h (42 mph)

Downshifting

When you must slow down in heavy traffic or on a steep **upgrade**, downshift before the engine starts to overwork. This gives better acceleration when you need more speed.

On a steep **downgrade**, downshifting helps maintain safe speed and prolongs brake life.

▼Driving Tips

Passing

For extra power when passing another vehicle or climbing steep grades, depress the accelerator fully. The transmission will shift to a lower gear, depending on vehicle speed.

Climbing steep grades from a stop

To climb a steep grade from a stopped position:

1. Depress the brake pedal.
2. Shift to D or M1, depending on the load weight and grade steepness.
3. Release the brake pedal while gradually accelerating.

Descending steep grades

When descending a steep grade, shift to lower gears, depending on load weight and grade steepness. Descend slowly, using the brakes only occasionally to prevent them from overheating.

Power Steering

Power steering is only operable when the engine is running. If the engine is off or if the power steering system is inoperable, you can still steer, but it requires more physical effort.

If the steering feels stiffer than usual during normal driving, consult an Authorized Mazda Dealer.

NOTE
The steering may feel rigid if you continuously attempt to steer when the vehicle is stopped or moving extremely slowly. This has been designed to protect the system and doesn't indicate a malfunction. If you don't attempt to steer for a minute, power steering will be restored.

▼Power Steering Malfunction Indicator Light

This indicator light illuminates when the ignition switch is turned to the ON position and goes off when the engine is started.

If this light illuminates while driving, it indicates a malfunction of the power steering system. Consult an Authorized Mazda Dealer.

NOTE
The power steering system is inoperable when the power steering malfunction indicator light illuminates. Steering is possible, but requires more physical effort.

Cruise Control

With cruise control, you can set and automatically maintain any speed of more than about 30 km/h (19 mph).

⚠ WARNING

Do not use the cruise control under the following conditions:

Using the cruise control under the following conditions is dangerous and could result in loss of vehicle control.

- *Hilly terrain*
- *Steep inclines*
- *Heavy or unsteady traffic*
- *Slippery or winding roads*
- *Similar restrictions that require inconsistent speed*

▼Cruise Main Indicator Light (Amber)/Cruise Set Indicator Light (Green)

CRUISE

The indicator light has two colors.

Cruise Main Indicator Light (Amber)

The indicator light illuminates amber when the ON/OFF switch is pressed and the cruise control system is activated.

Cruise Set Indicator Light (Green)

The indicator light illuminates green when a cruising speed has been set.

▼Activation/Deactivation

To activate the system, press the ON/OFF switch.
The cruise main indicator light illuminates.

To deactivate the system, press the switch again.
The cruise main indicator light turns off.

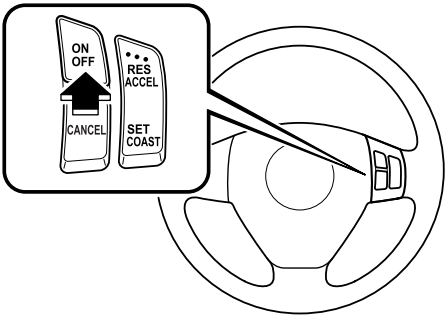

⚠ WARNING

Keep the ON/OFF switch off when cruise control is not in use:

Leaving the ON/OFF switch on when not using the cruise control is dangerous as you may hit one of the other buttons and put the vehicle in cruise control unexpectedly. This could result in loss of vehicle control.

▼To Set Speed

1. Activate the cruise control system by pressing the ON/OFF switch.
2. Accelerate to the desired speed, which must be more than 30 km/h (19 mph).

3. Press the SET/COAST button and release it at the speed you want. Release the accelerator at the same time.

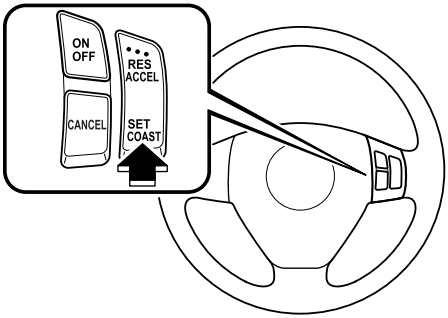

Don't continue to hold in the button. Until you release it, speed will continue to drop (unless you continue to accelerate) and you'll miss the desired speed.

NOTE

- *The SET function can't be activated until about 2 seconds after the ON/OFF switch has been engaged.*
- *On a steep grade, the vehicle may momentarily slow down going up or speed up while going down.*
- *Cruise control will turn off if vehicle speed drops below 30 km/h (19 mph) when cruise is activated, such as when climbing a steep grade.*

▼To Increase Cruising Speed

Follow either of these procedures.

To increase speed using cruise control switch

Press the RES/ACCEL button and hold it. Your vehicle will accelerate.
Release the button at the speed you want.

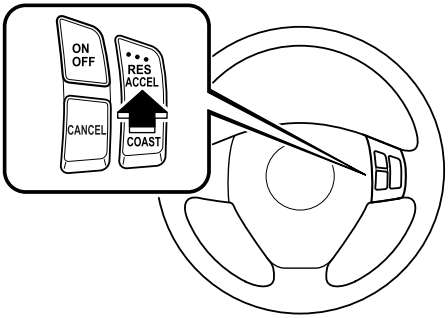

Your vehicle has a tap-up feature that allows you to increase your current speed in increments of 1.6 km/h (1 mph) by a momentary tap of the RES/ACCEL button. Multiple taps will increase your vehicle speed 1.6 km/h (1 mph) for each tap.

To increase speed using accelerator pedal

Depress the accelerator pedal to accelerate to the desired speed.
Press the SET/COAST button and release it immediately.

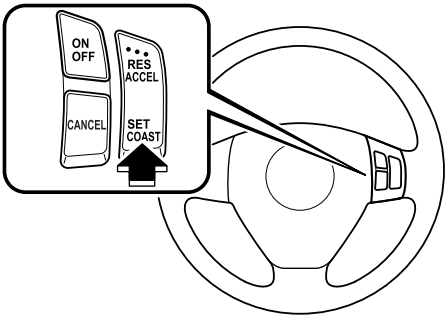

NOTE
Accelerate if you want to speed up temporarily when the cruise control is on. Greater speed will not interfere with or change the set speed. Take your foot off the accelerator to return to the set speed.

▼To Decrease Cruising Speed

Press the SET/COAST button and hold it.
The vehicle will gradually slow.
Release the button at the speed you want.

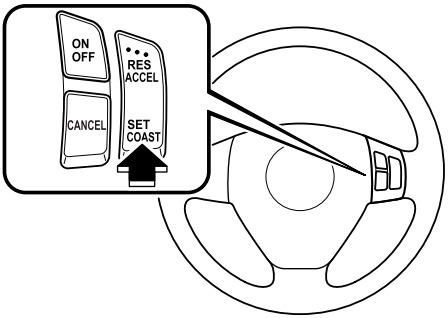

Your vehicle has a tap-down feature that allows you to decrease your current speed in decrements of 1.6 km/h (1 mph) by a momentary tap of the SET/COAST button. Multiple taps will decrease your vehicle speed 1.6 km/h (1 mph) for each tap.

▼To Resume Cruising Speed at More Than 30 km/h (19 mph)

If some other method besides the ON/OFF switch was used to cancel cruising speed (such as applying the brake pedal) and the system is still activated, the most recent set speed will automatically resume when the RES/ACCEL button is pressed. If vehicle speed is below 30 km/h (19 mph), increase the vehicle speed up to 30 km/h (19 mph) and press the RES/ACCEL button.

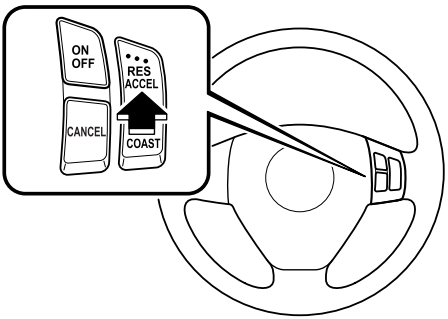

▼To Cancel

To cancel the system, use **one** of these methods:
- Press the ON/OFF switch.
- Slightly depress the brake pedal.
- Depress the clutch pedal (Manual transmission only).

- Press the CANCEL button.

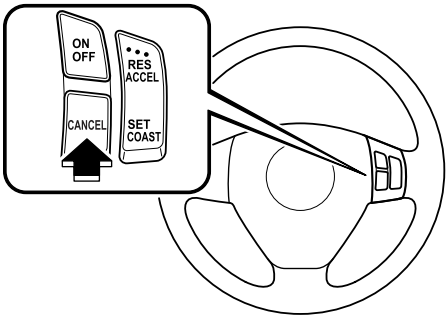

The system is off when the ignition is off.

NOTE
Cruise control will cancel at about 15 km/h (9 mph) below the preset speed (such as may happen when climbing a long, steep grade) or below 30 km/h (19 mph).

Traction Control System (TCS)*

The Traction Control System (TCS) enhances traction and safety by controlling engine torque and braking. When the TCS detects driving wheel slippage, it lowers engine torque and operates the brakes to prevent loss of traction.

This means that on a slick surface, the engine adjusts automatically to provide optimum power to the drive wheels without causing them to spin and lose traction.

⚠ WARNING

Do not rely on the traction control system as a substitute for safe driving:
The traction control system (TCS) cannot compensate for unsafe and reckless driving, excessive speed, tailgating (following another vehicle too closely), and hydroplaning (reduced tire friction and road contact because of water on the road surface). You can still have an accident.

Use snow tires or tire chains on the rear wheels only and drive at reduced speeds when roads are covered with ice and/or snow:
Driving without proper traction devices on snow and/or ice-covered roads is dangerous. The traction control system (TCS) alone cannot provide adequate traction and you could still have an accident.

NOTE
To turn off the TCS, press the DSC OFF switch (page 5-26).

*Some models.

▼TCS/DSC Indicator Light

This indicator light stays on for a few seconds when the ignition switch is turned to the ON position. If the TCS or DSC is operating, the indicator light flashes.

If the light stays on, the TCS or DSC may have a malfunction and they may not operate correctly. Take your vehicle to an Authorized Mazda Dealer.

NOTE

- *In addition to the indicator light flashing, a slight lugging sound will come from the engine. This indicates that the TCS is operating properly.*
- *On slippery surfaces, such as fresh snow, it will be impossible to achieve high rpm when the TCS is on.*

Dynamic Stability Control (DSC)*

The Dynamic Stability Control (DSC) automatically controls braking and engine torque in conjunction with systems such as ABS and TCS to help control side slip when driving on slippery surfaces, or during sudden or evasive maneuvering, enhancing vehicle safety.

Refer to ABS (page 5-8) and TCS (page 5-23).

⚠ WARNING

Do not rely on the dynamic stability control as a substitute for safe driving:

The dynamic stability control (DSC) cannot compensate for unsafe and reckless driving, excessive speed, tailgating (following another vehicle too closely), and hydroplaning (reduced tire friction and road contact because of water on the road surface). You can still have an accident.

*Some models.

⚠ CAUTION

- *The DSC may not operate correctly unless the following are observed:*
  - *Use tires of the correct size specified for your Mazda on all four wheels.*
  - *Use tires of the same manufacturer, brand and tread pattern on all four wheels.*
  - *Do not mix worn tires.*
- *The DSC may not operate correctly when tire chains are used or a temporary spare tire is installed because the tire diameter changes.*
- *If repair or replacement of the steering or other surrounding equipment is necessary, have it done at an Authorized Mazda Dealer. If the center position of the steering deviates, the DSC may not operate correctly because there is a sensor in the steering which detects driving conditions.*

▼TCS/DSC Indicator Light

This indicator light stays on for a few seconds when the ignition switch is turned to the ON position. If the TCS or DSC is operating, the indicator light flashes.

If the light stays on, the TCS or DSC may have a malfunction and they may not operate correctly. Take your vehicle to an Authorized Mazda Dealer.

▼DSC OFF Indicator Light

DSC OFF

This indicator light stays on for a few seconds when the ignition switch is turned to the ON position.
It also comes on when the DSC OFF switch is pressed and TCS/DSC is switched off (page 5-26).

If the light stays on when the TCS/DSC is not switched off, take your vehicle to an Authorized Mazda Dealer. The dynamic stability control may have a malfunction.

NOTE

If the battery is disconnected or a fuse is replaced, the DSC will be inoperable. In this case, the DSC OFF indicator light flashes and the TCS/DSC indicator light illuminates.
To make the DSC operable, do the following procedure with the battery connected.

1. *Turn the ignition switch to the ON position.*
2. *Turn the steering clockwise fully, then turn it counterclockwise fully.*
3. *Make sure the DSC OFF indicator go off.*
4. *Turn the ignition switch to the OFF position, then turn it to the ON position again.*
5. *Make sure the TCS/DSC indicator light goes off.*

If the TCS/DSC indicator light and the DSC OFF indicator light remain illuminated even after turning the ignition switch to the ON position, consult an Authorized Mazda Dealer.

▼DSC OFF Switch

Press the DSC OFF switch to turn off the TCS/DSC. The DSC OFF indicator light will illuminate.

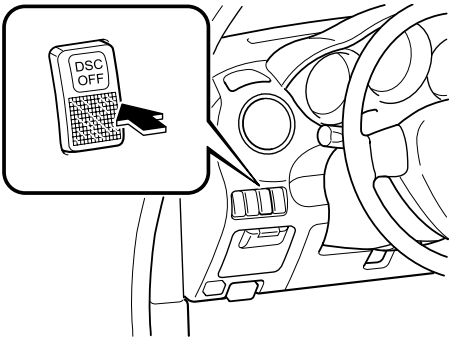

Press the switch again to turn the TCS/DSC back on. The DSC OFF indicator light will go out.

NOTE

- *When DSC is on and you attempt to free the vehicle when it is stuck, or drive it out of freshly fallen snow, the TCS (part of the DSC system) will activate. Depressing the accelerator will not increase engine power and freeing the vehicle may be difficult. When this happens, turn off the TCS/DSC.*
- *If the TCS/DSC is off when the engine is turned off, it automatically activates when the ignition switch is turned on.*
- *Leaving the TCS/DSC on will provide the best stability. When the TCS/DSC is off, the TCS/DSC does not activate but the brake LSD (Limited Slip Differentials) function remains.*
- *If the DSC OFF switch is pressed and held for a second or more, the TCS/DSC system may become inoperative due to the system detecting switch trouble. If the TCS/DSC system becomes inoperative, the TCS/DSC and the DSC OFF indicator lights illuminate simultaneously. In this case, turn off the engine and restart it to restore the TCS/DSC.*

Tire Pressure Monitoring System*

The tire pressure monitoring system (TPMS) monitors the pressure for each tire.
If tire pressure is too low in one or more tires, the system will inform the driver via the warning light in the instrument panel and by the warning beep sound.

The tire pressure sensors installed on each wheel send tire pressure data by radio signal to the receiver unit in the vehicle.

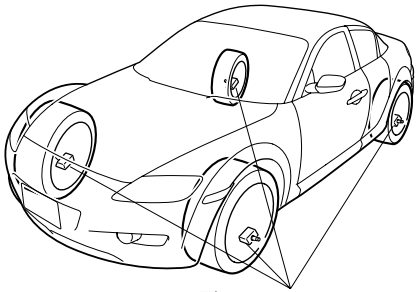
Tire pressure sensors

NOTE
When the ambient temperature is low due to seasonal changes, tire temperatures are also lower. When the tire temperature decreases, the air pressure decreases as well. The TPMS warning light may illuminate more frequently. Visually inspect the tires daily before driving, and check tire pressures monthly with a tire pressure gauge. When checking tire pressures, use of a digital tire pressure gauge is recommended.

TPMS does not alleviate your need to check the pressure and condition of all four tires regularly.

*Some models.

⚠ CAUTION

- *Each tire, including the spare (if provided), should be checked monthly when cold and inflated to the inflation pressure recommended by the vehicle manufacturer on the vehicle placard or tire inflation pressure label. (If your vehicle has tires of a different size than the size indicated on the vehicle placard or tire inflation pressure label, you should determine the proper tire inflation pressure for those tires.)*
  As an added safety feature, your vehicle has been equipped with a tire pressure monitoring system (TPMS) that illuminates a low tire pressure telltale when one or more of your tires is significantly under-inflated. Accordingly, when the low tire pressure telltale illuminates, you should stop and check your tires as soon as possible, and inflate them to the proper pressure. Driving on a significantly under-inflated tire causes the tire to overheat and can lead to tire failure. Under-inflation also reduces fuel efficiency and tire tread life, and may affect the vehicle's handling and stopping ability.
  Please note that the TPMS is not a substitute for proper tire maintenance, and it is the driver's responsibility to maintain correct tire pressure, even if under-inflation has not reached the level to trigger illumination of the TPMS low tire pressure telltale.
- *Your vehicle has also been equipped with a TPMS malfunction indicator to indicate when the system is not operating properly.*
  The TPMS malfunction indicator is combined with the low tire pressure telltale. When the system detects a malfunction, the telltale will flash for approximately one minute and then remain continuously illuminated. This sequence will continue upon subsequent vehicle start-ups as long as the malfunction exists. When the malfunction indicator is illuminated, the system may not be able to detect or signal low tire pressure as intended. TPMS malfunctions may occur for a variety of reasons, including the installation of replacement or alternate tires or wheels on the vehicle that prevent the TPMS from functioning properly. Always check the TPMS malfunction telltale after replacing one or more tires or wheels on your vehicle to ensure that the replacement or alternate tires and wheels allow the TPMS to continue to function properly.
- *To avoid false readings, the system samples for a little while before indicating a problem. As a result it will not instantaneously register a rapid tire deflation or blow out.*

NOTE

This device complies with part 15 of the FCC Rules. Operation is subject to the following two conditions: (1) This device may not cause harmful interference, and (2) this device must accept any interference received, including interference that may cause undesired operation.

▼Tire Pressure Monitoring System Warning Light

This warning light illuminates for a few seconds when the ignition switch is turned to the ON position.

Thereafter, the warning light illuminates and a beep is heard when tire pressure is too low in one or more tires, and flashes when there is a system malfunction.

⚠ WARNING

If the tire pressure monitoring system warning light illuminates or flashes, or the tire pressure warning beep sound is heard, decrease vehicle speed immediately and avoid sudden maneuvering and braking:

If the tire pressure monitoring system warning light illuminates or flashes, or the tire pressure warning beep sound is heard, it is dangerous to drive the vehicle at high speeds, or perform sudden maneuvering or braking. Vehicle drivability could worsen and result in an accident.
To determine if you have a slow leak or a flat, pull over to a safe position where you can check the visual condition of the tire and determine if you have enough air to proceed to a place where air may be added and the system monitored again, an Authorized Mazda Dealer or a tire repair station.

Do not ignore the TPMS Warning Light:

Ignoring the TPMS warning light is dangerous, even if you know why it is illuminated. Have the problem taken care of as soon as possible before it develops into a more serious situation that could lead to tire failure and a dangerous accident.

Warning light illuminates/Warning beep sounds

When the warning light illuminates, and the warning beep sound is heard (about 3 seconds), tire pressure is too low in one or more tires.

Adjust the tire pressure to the correct tire pressure. Refer to the specification charts (page 10-6).

CAUTION

When replacing/repairing the tires or wheels or both, have the work done by an Authorized Mazda Dealer, or the tire pressure sensors may be damaged.

NOTE

- *Perform tire pressure adjustment when the tires are cold. Tire pressure will vary according to the tire temperature, therefore let the vehicle stand for 1 hour or only drive it 1.6 km (1 mile) or less before adjusting the tire pressures. When pressure is adjusted on hot tires to the cold inflation pressure, the TPMS warning light/beep may turn on after the tires cool and pressure drops below specification.*
  Also, an illuminated TPMS warning light, resulting from the tire air pressure dropping due to cold ambient temperature, may go out if the ambient temperature rises. In this case, it will also be necessary to adjust the tire air pressures. If the TPMS warning light illuminates due to a drop in tire air pressure, make sure to check and adjust the tire air pressures.
- *After adjusting the tire air pressures, it may require some time for the TPMS warning light to go out. If the TPMS warning light remains illuminated, drive the vehicle at a speed of at least 25 km/h (16 mph) for 10 minutes, and then verify that it goes out.*
- *Tires can loose a little air quite naturally over time and the TPMS cannot tell if the tires are getting too soft over time or you have a flat. However, when you find one low tire in a set of four - that is an indication of trouble; you should have someone drive the vehicle slowly forward so you can inspect any low tire for cuts and any metal sticking through tread or sidewall. Put a few drops of water in the valve stem to see if it bubbles indicating a bad valve. Leaks need to be addressed by more than simply refilling the trouble tire as leaks are dangerous - take it to an Authorized Mazda Dealer which has all the equipment to fix tires, TPMS systems and order the best replacement tire for your vehicle.*

If the warning light illuminates again even after the tire pressures are adjusted, there may be a tire puncture.

Vehicles with Instant Mobility System (IMS) emergency flat tire repair kit

If an emergency tire repair is needed, repair the punctured tire with the emergency flat tire repair kit (page 7-5).

⚠ CAUTION

Do not use non-genuine tire sealant. It may damage the tire pressure sensor.

Vehicles with optional temporary spare tire

If you have bought the optional temporary spare tire, replace the punctured tire with the temporary spare tire . Refer to the manufacturer's instructions.

NOTE

A tire pressure sensor is not installed to the temporary spare tire. The warning light will flash continuously while the temporary spare tire is being used.

Warning light flashes

When the warning light flashes, there may be a system malfunction. Consult an Authorized Mazda Dealer.

▼System Error Activation

When the warning light flashes, there may be a system malfunction. Consult an Authorized Mazda Dealer.
A system error activation may occur in the following cases:

- When there is equipment or a device near the vehicle using the same radio frequency as that of the tire pressure sensors.
- When a metallic device such as a non-genuine navigation system is equipped near the center of the dashboard, which may block radio signals from the tire pressure sensor to the receiver unit.
- When using the following devices in the vehicle that may cause radio interference with the receiver unit.
  - A digital device such as a personal computer.
  - A current converter device such as a DC-AC converter.
- When excess snow or ice adheres to the vehicle, especially around the wheels.
- When the tire pressure sensor batteries are exhausted.
- When using a wheel with no tire pressure sensor installed.
- When using tires with steel wire reinforcement in the side walls.
- When using tire chains.

▼Tires and Wheels

⚠ CAUTION

When inspecting or adjusting the tire air pressures, do not apply excessive force to the stem part of the wheel unit. The stem part could be damaged.

Changing tires and wheels

The following procedure allows the TPMS to recognize a tire pressure sensor's unique ID signal code whenever tires or wheels are changed, such as changing to and from winter tires.

NOTE
Each tire pressure sensor has a unique ID signal code. The signal code must be registered with the TPMS before it can work. The easiest way to do it is to have an Authorized Mazda Dealer change your tire and complete ID signal code registration.

When having tires changed at an Authorized Mazda Dealer

Tire pressure sensor ID signal code registration is completed when an Authorized Mazda Dealer changes your vehicle's tires.

When changing tires yourself

If you or someone else changes tires, you or someone else can also undertake the steps for the TPMS to complete the ID signal code registration.

1. After tires have been changed, turn the ignition switch to the ON position, then turn it back to the ACC or LOCK position.
2. Wait for about 15 minutes.
3. After about 15 minutes, drive the vehicle at a speed of at least 25 km/h (16 mph) for 10 minutes and the tire pressure sensor ID signal code will be registered automatically.

NOTE
If the vehicle is driven within about 15 minutes of changing tires, the tire pressure monitoring system warning light will flash because the sensor ID signal code would not have been registered. If this happens, park the vehicle for about 15 minutes, after which the sensor ID signal code will register upon driving the vehicle for 10 minutes.

Replacing tires and wheels

CAUTION

- *When replacing/repairing the tires or wheels or both, have the work done by an Authorized Mazda Dealer, or the tire pressure sensors may be damaged.*
- *The wheels equipped on your Mazda are specially designed for installation of the tire pressure sensors. Do not use non-genuine wheels, otherwise it may not be possible to install the tire pressure sensors.*

Be sure to have the tire pressure sensors installed whenever tires or wheels are replaced.
When having a tire or wheel or both replaced, the following types of tire pressure sensor installations are possible.

- The tire pressure sensor is removed from the old wheel and installed to the new one.
- The same tire pressure sensor is used with the same wheel. Only the tire is replaced.
- A new tire pressure sensor is installed to a new wheel.

NOTE

- *The tire pressure sensor ID signal code must be registered when a new tire pressure sensor is purchased. For purchase of a tire pressure sensor and registration of the tire pressure sensor ID signal code, consult an Authorized Mazda Dealer.*
- *When reinstalling a previously removed tire pressure sensor to a wheel, replace the grommet (seal between valve body/sensor and wheel) for the tire pressure sensor.*

Meters and Gauges

When the ignition switch is in the ON position, the dashboard gauges illuminate.

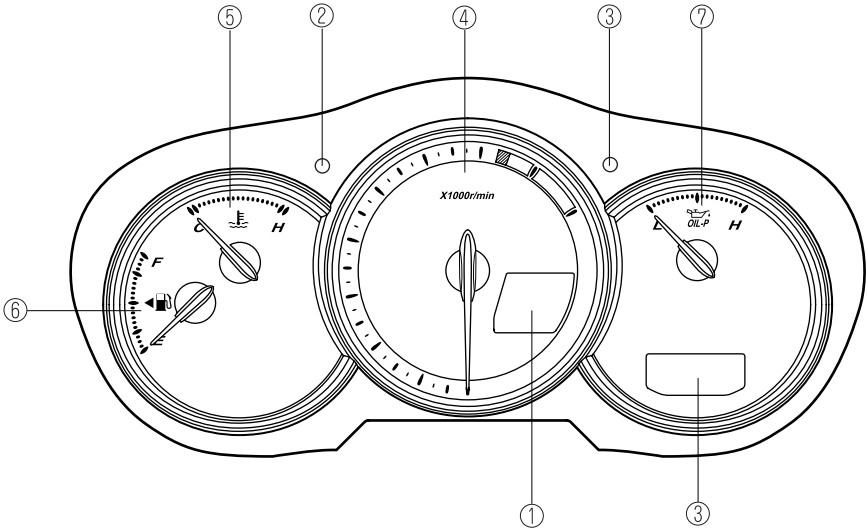

① Speedometer ..... page 5-34
② Speed Unit Selector ..... page 5-34
③ Odometer, Trip Meter and Trip Meter Selector ..... page 5-34
④ Tachometer ..... page 5-35
⑤ Engine Coolant Temperature Gauge ..... page 5-36
⑥ Fuel Gauge ..... page 5-36
⑦ Engine Oil Pressure Gauge ..... page 5-36

▼Speedometer

The speedometer indicates the speed of the vehicle.

▼Speed Unit Selector

In some countries, you may have to change the speed units between km/h and mph.
Press the speed unit selector for 2 second or more.
The speed units for the speedometer will change between km/h and mph.

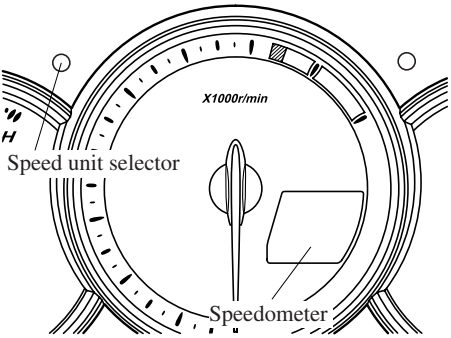

NOTE
Odometer and trip meter distance units will change between kilometers and miles in accordance with the speed unit.

▼Odometer, Trip Meter and Trip Meter Selector

The display mode can be changed between trip meter A and trip meter B by pressing the selector while one of them is displayed. The selected mode will be displayed.

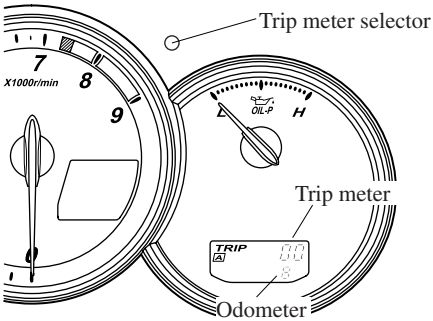

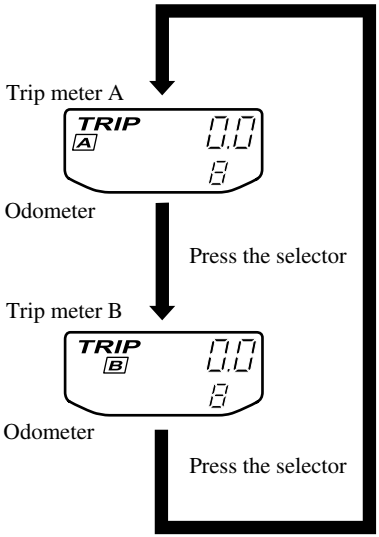

NOTE
When the ignition switch is in the ACC or LOCK position, the odometer or trip meters cannot be displayed, however, pressing the selector button can inadvertently switch the trip meters or reset them during an approximate ten-minute period in the following cases:
- *After the ignition switch is turned to the ACC or LOCK position from the ON position.*
- *After any door is opened.*

Odometer

The odometer records the total distance the vehicle has been driven.

Trip meter

The trip meter can record the total distance of two trips. One is recorded in trip meter A, and the other is recorded in trip meter B.

For instance, trip meter A can record the distance from the point of origin, and trip meter B can record the distance from where the fuel tank is filled.

When trip meter A is selected, pressing the selector again within one second will change to trip meter B mode.

When trip meter A is selected, TRIP A will be displayed. When trip meter B is selected, TRIP B will be displayed.

The trip meter records the total distance the vehicle is driven until the meter is again reset. Return it to “0.0” by holding the selector depressed for more than 1 second. Use this meter to measure trip distances and to compute fuel consumption.

NOTE
- *Only the trip meters record tenths of kilometers (miles).*
- *The trip record will be erased when:*
  - *The power supply is interrupted (blown fuse or the battery is disconnected).*
  - *The vehicle is driven over 999.9 km (mile).*

▼Tachometer

The tachometer shows engine speed in thousands of revolutions per minute (rpm).

Automatic transmission

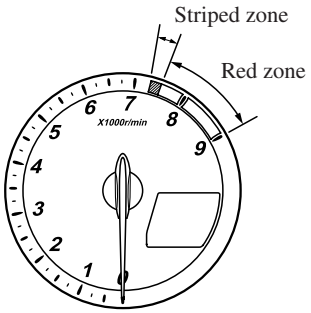

Manual transmission

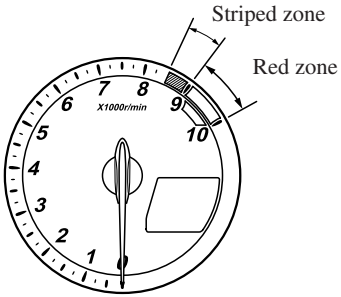

⚠ CAUTION

Don't run the engine with the tachometer needle in the RED ZONE. This may cause severe engine damage.

NOTE

- *The beep sounds to indicate engine overrev when the tachometer needle enters the striped zone.*
- *To protect the engine, when the engine coolant temperature is low, the engine does not run at high speeds. The fuel supply will be cut at an rpm lower than the red zone.*

▼Engine Coolant Temperature Gauge

The engine coolant temperature gauge shows the temperature of the engine coolant.

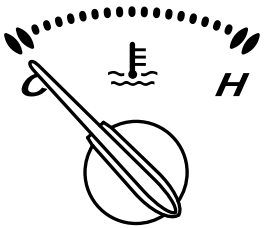

If the needle is near H, it indicates overheating.

⚠ CAUTION

Driving with an overheated engine can cause serious engine damage (page 7-16).

▼Fuel Gauge

The fuel gauge shows approximately how much fuel is in the tank. We recommend keeping the tank over 1/4 full. When the low fuel warning light illuminates or when the needle is near E, refuel as soon as possible.

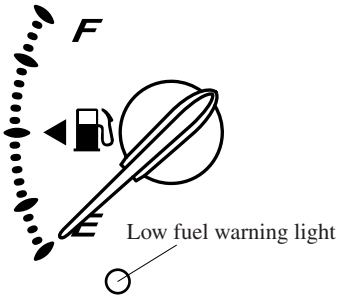

NOTE

The direction of the arrow (◀⛽) shown that the fuel-filler lid is on the left side of the vehicle.

▼Engine Oil Pressure Gauge

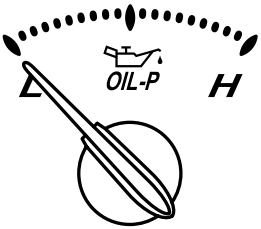

Engine oil pressure is normal when the engine oil pressure gauge needle points halfway between L and H with the engine running.

If the needle on the gauge doesn't move after starting the engine, follow steps 1 through 3.

If the engine oil pressure gauge moves to L (low) while you are driving, drive to the side of the road and park off the right-of-way. Set the parking brake. Then follow steps 1 through 3.

1. Turn off the engine and inspect the engine oil level (page 8-12). If it's low, add oil.
2. Start the engine.
3. If the needle still doesn't move, have your vehicle checked at an Authorized Mazda Dealer.

⚠ CAUTION

Don't run the engine if the oil pressure is low. It could result in extensive engine damage.

NOTE

The Mazda RX-8 requires regular checking of the engine oil level. The compact, high performance RENESIS rotary engine in your vehicle consumes a small amount of engine oil due to its structural design. An oil pump optimizes the amount of oil injected to lubricate the rotor seals in the combustion cycle. Although your vehicle is equipped with an engine oil level warning light and an engine oil pressure gauge, it is best to keep the engine oil level in the range between full and low by checking the oil dipstick regularly. Mazda recommends checking the oil level at every second fuel filling. The oil consumption of the engine depends on engine speed and engine load. Under extreme driving conditions, oil consumption can be higher.

▼Dashboard Illumination

Rotate the thumb wheel to adjust the brightness of the instrument cluster and other illuminations in the dashboard.

NOTE

- *The brightness of dashboard illuminations (except instrument cluster) can be adjusted when the headlight switch is in the ● or ≣D position.*
- *The brightness of the instrument cluster illumination can be adjusted when the headlight switch is in any position.*

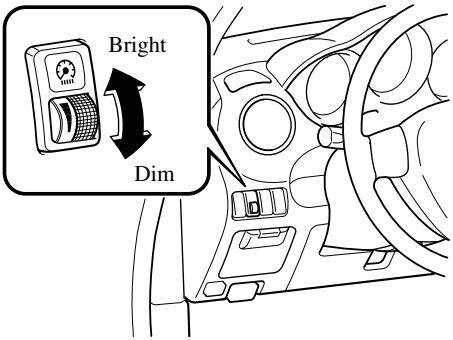

Canceling the illumination dimmer

When the headlight switch is in the ● or ≣D position, the illumination of the instrument cluster and the information display dims (the instrument cluster illumination color turns to red).

When driving on snowy or foggy roads, or in other situations when the instrument cluster or information display's visibility is reduced due to glare from surrounding brightness, cancel the illumination dimmer and increase the illumination intensity.

To cancel the illumination dimmer, rotate the thumb wheel upward fully. You may hear a click sound and the illumination dimmer will be canceled (instrument cluster illumination color turns to white).

NOTE
If the dashboard illumination switch is kept at the illumination dimmer cancel position, the instrument cluster and the information display will not dim when the headlight switch is turned to the ● or ≣D position again.

Warning/Indicator Lights

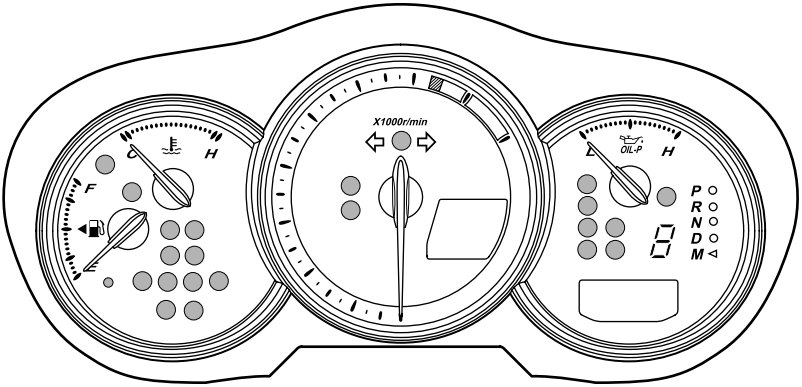

Warning/Indicator lights will appear in any of the highlighted areas

Signal	Warning/Indicator Lights	Page
BRAKE	Brake System Warning Light	5-41
	Charging System Warning Light	5-42
	Engine Oil Level Warning Light	5-42
	Engine Coolant Level Warning Light	5-43
	Check Engine Light	5-43
ABS	ABS Warning Light	5-41
	Air Bag/Front Seat Belt Pretensioner System Warning Light	5-44
○	Low Fuel Warning Light	5-44
	Seat Belt Warning Light/Beep	5-45

Warning/Indicator Lights and Beep Sounds

Signal	Warning/Indicator Lights	Page
	Door-Ajar Warning Light	5-45
	Low Washer Fluid Level Warning Light	5-46
AT	Automatic Transmission Warning Light	5-46
	Tire Pressure Monitoring System Warning Light	5-46
KEY	KEY Warning Light (Red)/KEY Indicator Light (Green)	5-49
	Security Indicator Light	5-50
	Headlight High-Beam Indicator Light	5-50
PRNDM	Shift Position Indicator Light	5-51
	TCS/DSC Indicator Light	5-51
DSC OFF	DSC OFF Indicator Light	5-51
CRUISE	Cruise Main Indicator Light (Amber)/Cruise Set Indicator Light (Green)	5-52
	Light-On Indicator Light	5-52
	Power Steering Malfunction Indicator Light	5-52
	Headlight Auto-Leveling Malfunction Indicator Light	5-53
	Turn Signal/Hazard Warning Indicator Lights	5-53

▼Brake System Warning Light

This warning has the following functions:

Parking brake warning

The light comes on when the parking brake is applied with the ignition switch in the START or ON position. It turns off when the parking brake is fully released.

Low brake fluid level warning

If the light stays on after the parking brake is fully released, you may have a brake problem.

Drive to the side of the road and park off the right-of-way.

You may notice that the pedal is harder to push or that it may go closer to the floor. In either case, it will take longer to stop the vehicle.

1. With the engine stopped, check the brake fluid level immediately and add fluid as required (page 8-15).
2. After adding fluid, check the light again.

If the warning light remains on, or if the brakes do not operate properly, do not drive the vehicle. Have it towed to an Authorized Mazda Dealer.

Even if the light goes out have your brake system inspected as soon as possible by an Authorized Mazda Dealer.

NOTE

Having to add brake fluid is sometimes an indicator of leakage. Consult an Authorized Mazda Dealer as soon as possible even if the brake light is no longer illuminated.

⚠ WARNING

Do not drive with the brake system warning light illuminated. Contact an Authorized Mazda Dealer to have the brakes inspected as soon as possible:

Driving with the brake system warning light illuminated is dangerous. It indicates that your brakes may not work at all or that they could completely fail at any time. If this light remains illuminated, after checking that the parking brake is fully released, have the brakes inspected immediately.

▼ABS Warning Light

The warning light stays on for a few seconds when the ignition switch is turned to the ON position.

If the ABS warning light stays on while you're driving, the ABS control unit has detected a system malfunction. If this occurs, your brakes will function normally as if the vehicle had no ABS.
Should this happen, consult an Authorized Mazda Dealer as soon as possible.

NOTE
When the engine is jump-started to charge the battery, uneven rpm occurs and the ABS warning light comes on. This is due to a weak battery, not a malfunction.
Recharge the battery.

▼Electronic Brake Force Distribution System Warning

If the electronic brake force distribution control unit determines that some components are operating incorrectly, the control unit may turn the brake system warning light and the ABS warning light on at the same time. The problem is likely to be the electronic brake force distribution system.

⚠ WARNING

Do not drive with both the ABS warning light and brake warning light illuminated. Have the vehicle towed to an Authorized Mazda Dealer to have the brakes inspected as soon as possible:

Driving when the brake system warning light and ABS warning light are illuminated at the same time is dangerous.
When both lights are illuminated, the rear wheels could lock more quickly in an emergency stop than under normal circumstances.

▼Charging System Warning Light

This warning light illuminates when the ignition switch is turned to the ON position and turns off when the engine is started.

If the warning light illuminates while driving, it indicates a malfunction of the alternator or of the charging system. Drive to the side of the road and park off the right-of-way. Consult an Authorized Mazda Dealer.

⚠ CAUTION

Don't continue driving when the charging system warning light is illuminated because the engine could stop unexpectedly.

▼Engine Oil Level Warning Light

This warning light indicates low engine oil level.

If the light illuminates while driving:

1. Drive to the side of the road and park off the right-of-way.

2. Turn off the engine and inspect the engine oil level (page 8-12). If it's low, add oil.
3. Check the light.

If the engine oil level warning light is illuminated and you are unable to immediately add engine oil, do not drive at high speed, keep the engine speed low and get to a location where oil can be added as soon as possible. We recommend an Authorized Mazda Dealer.

If the light remains illuminated even after you add oil, have your vehicle checked at an Authorized Mazda Dealer.

⚠ CAUTION

Don't run the engine if the oil level is low. It could result in extensive engine damage.

NOTE

The Mazda RX-8 requires regular checking of the engine oil level. The compact, high performance RENESIS rotary engine in your vehicle consumes a small amount of engine oil due to its structural design. An oil pump optimizes the amount of oil injected to lubricate the rotor seals in the combustion cycle. Although your vehicle is equipped with an engine oil level warning light and an engine oil pressure gauge, it is best to keep the engine oil level in the range between full and low by checking the oil dipstick regularly. Mazda recommends checking the oil level at every second fuel filling. The oil consumption of the engine depends on engine speed and engine load. Under extreme driving conditions, oil consumption can be higher.

▼Engine Coolant Level Warning Light

This warning light indicates low engine coolant level.

If the light illuminates while driving:

1. Drive to the side of the road and park off the right-of-way.
2. Turn off the engine and inspect the engine coolant level (page 8-13). If it's low, add engine coolant.
3. Check the light.

If the light remains illuminated even after you add engine coolant, have your vehicle towed to an Authorized Mazda Dealer.

⚠ CAUTION

Don't run the engine if the engine coolant level is low. It could result in extensive engine damage.

▼Check Engine Light

This indicator light illuminates when the ignition switch is turned to the ON position and goes off when the engine is started.

If this light comes on while driving, the vehicle may have a problem. It is important to note the driving conditions when the light came on and consult an Authorized Mazda Dealer.

The check engine light may come on in the following cases:
- The fuel tank level being very low or approaching empty.
- The engine's electrical system has a problem.
- The emission control system has a problem.
- The fuel-filler cap is missing or not tightened securely.

If the check engine light remains on or flashes continuously, do not drive at high speeds and consult an Authorized Mazda Dealer as soon as possible.

▼Air Bag/Front Seat Belt Pretensioner System Warning Light

If the air bag/front seat belt pretensioner system is working properly, the warning light illuminates when the ignition switch is turned to the ON position or after the engine is cranked. The warning light turns off after a specified period of time.

A system malfunction is indicated if the warning light constantly flashes, constantly illuminates or does not illuminate at all when the ignition switch is turned to the ON position. If any of these occur, consult an Authorized Mazda Dealer as soon as possible. The system may not work in an accident.

⚠ WARNING

Never tamper with the air bag/ pretensioner systems and always have an Authorized Mazda Dealer perform all servicing and repairs:

Self-servicing or tampering with the systems is dangerous. An air bag/ pretensioner could accidentally activate or become disabled causing serious injury or death.

▼Low Fuel Warning Light

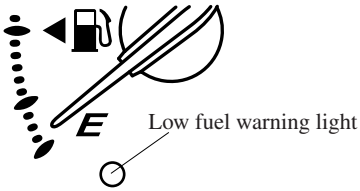

This warning light in the fuel gauge signals that the fuel tank will soon be empty.
Refuel as soon as possible.

▼Seat Belt Warning Light/Beep

The seat belt warning light illuminates and a beep sound will be heard if the driver's seat belt is not fastened when the ignition switch is turned to the ON position.

Conditions of operation

Condition	Result
The driver's seat belt is not fastened when the ignition switch is turned to the ON position.	The warning light flashes and a beep sound will be heard for about 6 seconds.
The driver's seat belt is fastened while the warning light and the beep sound are activated.	The warning light turns off and the beep sound stops.
The driver's seat belt is fastened before the ignition switch is turned to the ON position.	The warning light will not illuminate and the beep sound will not be heard.

Belt minder

NOTE
The belt minder can be deactivated. Consult an Authorized Mazda Dealer to deactivate and restore the seat belt minder.

The belt minder is a supplemental warning to the seat belt warning function. If the driver's seat belt is not fastened when the ignition switch is turned to the ON position, the warning light/beep operates to give you further reminders according to the chart below.

Condition	Vehicle speed			
	Between 0 — 20 km/h (0 — 12 mph)		20 km/h (12 mph) or more	
Seat belt	○	×	○	×
Indicator				
Beep				♪

○ : Fastened
× : Unfastened
: Illuminated
: Flashing
♪ : Beep

Once the beep sound is heard, it continues sounding even if the vehicle speed lowers to 20 km/h (12 mph) or less until the seatbelt is fastened or the beep sound period has passed.

▼Door-Ajar Warning Light

This warning light illuminates when any door is not securely closed.
Close the door securely before driving the vehicle.

▼Low Washer Fluid Level Warning Light*

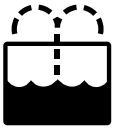

This warning light indicates that little washer fluid remains. Add fluid (page 8-16).

▼Automatic Transmission Warning Light

This warning light stays on for a few seconds when the ignition switch is turned to the ON position.
The light illuminates when the transmission has a problem.

⚠ CAUTION

If the automatic transmission warning light illuminates, the transmission has an electrical problem. Continuing to drive your Mazda in this condition could cause damage to your transmission. Consult an Authorized Mazda Dealer as soon as possible.

▼Tire Pressure Monitoring System Warning Light*

This warning light illuminates for a few seconds when the ignition switch is turned to the ON position.

Thereafter, the warning light illuminates and a beep is heard when tire pressure is too low in one or more tires, and flashes when there is a system malfunction.

*Some models.

WARNING

If the tire pressure monitoring system warning light illuminates or flashes, or the tire pressure warning beep sound is heard, decrease vehicle speed immediately and avoid sudden maneuvering and braking:

If the tire pressure monitoring system warning light illuminates or flashes, or the tire pressure warning beep sound is heard, it is dangerous to drive the vehicle at high speeds, or perform sudden maneuvering or braking. Vehicle drivability could worsen and result in an accident.
To determine if you have a slow leak or a flat, pull over to a safe position where you can check the visual condition of the tire and determine if you have enough air to proceed to a place where air may be added and the system monitored again, an Authorized Mazda Dealer or a tire repair station.

Do not ignore the TPMS Warning Light:

Ignoring the TPMS warning light is dangerous, even if you know why it is illuminated. Have the problem taken care of as soon as possible before it develops into a more serious situation that could lead to tire failure and a dangerous accident.

Warning light illuminates/Warning beep sounds

When the warning light illuminates, and the warning beep sound is heard (about 3 seconds), tire pressure is too low in one or more tires.

Adjust the tire pressure to the correct tire pressure. Refer to the specification charts (page 10-6).

CAUTION

When replacing/repairing the tires or wheels or both, have the work done by an Authorized Mazda Dealer, or the tire pressure sensors may be damaged.

NOTE

- *Perform tire pressure adjustment when the tires are cold. Tire pressure will vary according to the tire temperature, therefore let the vehicle stand for 1 hour or only drive it 1.6 km (1 mile) or less before adjusting the tire pressures. When pressure is adjusted on hot tires to the cold inflation pressure, the TPMS warning light/beep may turn on after the tires cool and pressure drops below specification.*
  Also, an illuminated TPMS warning light, resulting from the tire air pressure dropping due to cold ambient temperature, may go out if the ambient temperature rises. In this case, it will also be necessary to adjust the tire air pressures. If the TPMS warning light illuminates due to a drop in tire air pressure, make sure to check and adjust the tire air pressures.
- *After adjusting the tire air pressures, it may require some time for the TPMS warning light to go out. If the TPMS warning light remains illuminated, drive the vehicle at a speed of at least 25 km/h (16 mph) for 10 minutes, and then verify that it goes out.*
- *Tires can loose a little air quite naturally over time and the TPMS cannot tell if the tires are getting too soft over time or you have a flat. However, when you find one low tire in a set of four - that is an indication of trouble; you should have someone drive the vehicle slowly forward so you can inspect any low tire for cuts and any metal sticking through tread or sidewall. Put a few drops of water in the valve stem to see if it bubbles indicating a bad valve. Leaks need to be addressed by more than simply refilling the trouble tire as leaks are dangerous - take it to an Authorized Mazda Dealer which has all the equipment to fix tires, TPMS systems and order the best replacement tire for your vehicle.*

If the warning light illuminates again even after the tire pressures are adjusted, there may be a tire puncture.

Vehicles with Instant Mobility System (IMS) emergency flat tire repair kit

If an emergency tire repair is needed, repair the punctured tire with the emergency flat tire repair kit (page 7-5).

⚠ CAUTION

Do not use non-genuine tire sealant. It may damage the tire pressure sensor.

Vehicles with optional temporary spare tire

If you have bought the optional temporary spare tire, replace the punctured tire with the temporary spare tire . Refer to the manufacturer's instructions.

NOTE

A tire pressure sensor is not installed to the temporary spare tire. The warning light will flash continuously while the temporary spare tire is being used.

Warning light flashes

When the warning light flashes, there may be a system malfunction. Consult an Authorized Mazda Dealer.

▼KEY Warning Light (Red)/KEY Indicator Light (Green) (with Advanced Key)

This indicator has two colors.

KEY Warning Light (Red)

When illuminated

- When the ignition switch is turned to the ON position, it illuminates momentarily and then goes out.
- If any malfunction occurs in the advanced keyless system, it illuminates continuously.

⚠ WARNING

Do not drive the vehicle with the KEY warning light illuminated:

If the KEY warning light remains illuminated, do not continue to drive using the advanced key system. Park the vehicle in a safe place and use the auxiliary key to continue driving the vehicle. Have the vehicle inspected at an Authorized Mazda Dealer as soon as possible.

When flashing

- Under the following conditions, the KEY warning light (red) flashes to inform the driver that the start knob will not rotate to the ACC position even if it is pushed in from the LOCK position.
  - The advanced key battery is dead.
  - The advanced key is not within operational range.
  - The advanced key is placed in areas where it is difficult for the system to detect the signal (page 3-7).
  - A key from another manufacturer similar to the advanced key is in the operational range.
- Under the following conditions, the KEY warning light (red) will flash continuously when the start knob has not been returned to the LOCK position to notify the driver that the advanced key has been removed from the vehicle. It will stop flashing when the advanced key is back inside the vehicle.
  - The start knob has not been returned to the LOCK position, the driver's door is open, and the advanced key is removed from the vehicle.
  - The start knob has not been returned to the LOCK position and all the doors are closed after removing the advanced key from the vehicle.

NOTE

The flashing KEY warning light (red) and the beep sound operate simultaneously (page 3-20).

KEY Indicator Light (Green)

When illuminated

When the start knob is pushed in from the LOCK position, the system confirms that the correct advanced key is inside the vehicle, the KEY indicator light (green) illuminates, and the start knob can be turned to the ACC position (page 3-9).

When flashing

When the advanced key battery power is low, the KEY indicator light flashes for 30 seconds after the start knob is turned from the ON position to the ACC or LOCK position. Replace with a new battery before the advanced key becomes unusable (page 3-6).

NOTE

The advanced key can be set so that the KEY indicator light (green) does not flash even if the battery power is low.
Refer to Setting Change (Function Customization)(page 3-19).

▼Security Indicator Light

This indicator light starts flashing every 2 seconds when the ignition switch is turned from the ON to the ACC position and the immobilizer system is armed.

The light stops flashing when the ignition switch is turned to the ON position with the correct ignition key.
At this time, the immobilizer system is disarmed and the light illuminates for about 3 seconds and then goes out.

If the engine doesn't start with the correct ignition key, and the security indicator light keeps illuminating or flashing, the system may have a malfunction. Consult an Authorized Mazda Dealer.

▼Headlight High-Beam Indicator Light

This light indicates one of two things:
- The high-beam headlights are on.
- The turn signal lever is in the flash-to-pass position.

▼Shift Position Indicator Light (Automatic Transmission)

This indicates the selected shift position when the ignition switch is in the ON position.

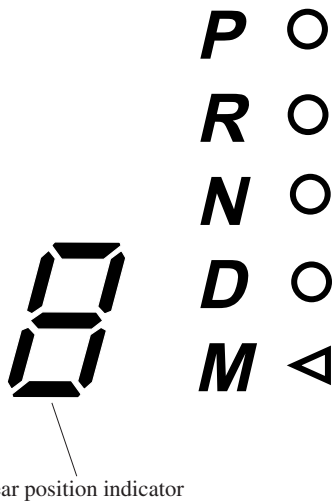

Gear position indicator

When the shift lever is in the D or M position, the numeral for the selected gear displays.

▼TCS/DSC Indicator Light*

This indicator light stays on for a few seconds when the ignition switch is turned to the ON position. If the TCS or DSC is operating, the indicator light flashes.

If the light stays on, the TCS or DSC may have a malfunction and they may not operate correctly. Take your vehicle to an Authorized Mazda Dealer.

▼DSC OFF Indicator Light*

This indicator light stays on for a few seconds when the ignition switch is turned to the ON position.
It also comes on when the DSC OFF switch is pressed and TCS/DSC is switched off (page 5-26).

If the light stays on when the TCS/DSC is not switched off, take your vehicle to an Authorized Mazda Dealer. The dynamic stability control may have a malfunction.

*Some models.

NOTE
If the battery is disconnected or a fuse is replaced, the DSC will be inoperable. In this case, the DSC OFF indicator light flashes and the TCS/DSC indicator light illuminates.
To make the DSC operable, do the following procedure with the battery connected.

1. *Turn the ignition switch to the ON position.*
2. *Turn the steering clockwise fully, then turn it counterclockwise fully.*
3. *Make sure the DSC OFF indicator go off.*
4. *Turn the ignition switch to the OFF position, then turn it to the ON position again.*
5. *Make sure the TCS/DSC indicator light goes off.*

If the TCS/DSC indicator light and the DSC OFF indicator light remain illuminated even after turning the ignition switch to the ON position, consult an Authorized Mazda Dealer.

▼Cruise Main Indicator Light (Amber)/Cruise Set Indicator Light (Green)

The indicator light has two colors.

Cruise Main Indicator Light (Amber)

The indicator light illuminates amber when the ON/OFF switch is pressed and the cruise control system is activated.

Cruise Set Indicator Light (Green)

The indicator light illuminates green when a cruising speed has been set.

▼Light-On Indicator Light

This indicator light comes on when the exterior lights and dashboard illumination are on.

▼Power Steering Malfunction Indicator Light

This indicator light illuminates when the ignition switch is turned to the ON position and goes off when the engine is started.

If this light illuminates while driving, it indicates a malfunction of the power steering system. Consult an Authorized Mazda Dealer.

NOTE
The power steering system is inoperable when the power steering malfunction indicator light illuminates. Steering is possible, but requires more physical effort.

▼Headlight Auto-Leveling Malfunction Indicator Light*

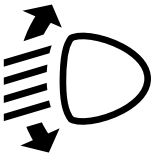

This indicator light stays on far a few seconds when the ignition switch is turned to the ON position.
Thereafter, the indicator light will illuminate when the headlight auto-leveling system has a malfunction.

If the indicator light illuminates, contact an Authorized Mazda Dealer.

▼Turn-Signal/Hazard Warning Indicator Lights

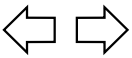

When operating the turn signal lights, the left or right turn signal indicator light flashes to indicate which turn signal light is operating (page 5-57).

When operating the hazard warning lights, both turn signal indicator lights flash (page 5-61).

NOTE
If an indicator light remains illuminated (does not flash) or if it flashes abnormally, one of the turn signal bulbs may be burned out.

Beep Sounds

▼Seat Belt Warning Beep

If the driver's seat belt is not fastened when the ignition switch is turned to the ON position, a beep sound will be heard for about 6 seconds.
If the driver's seat belt is not fastened and the vehicle is driven at a speed faster than about 20 km/h (12 mph), a beep sound will be heard again for a specified period of time.
Refer to Seat Belt Warning Light/Beep on page 5-45.

▼Ignition Key Reminder

If the ignition switch is in the LOCK or ACC position with the key inserted, a continuous beep sound will be heard when the driver's door is opened.

▼Lights-On Reminder

If lights are on and the key is removed from the ignition switch, a continuous beep sound will be heard when the driver's door is opened.

NOTE
When the advanced keyless function is used and the start knob is in the ACC position, the Start Knob Not in Lock Warning Beep (page 3-16) overrides the lights-on reminder.

▼Engine Overrev Warning Beep

The beep sounds to indicate engine overrev when the tachometer needle enters the striped zone (page 5-35).

*Some models.

▼Tire Inflation Pressure Warning Beep*

The warning beep sound will be heard for about 3 seconds when there is any abnormality in tire inflation pressures (page 5-27).

▼Advanced Keyless Warning (with Advanced Key)

Warning indicators for the advanced key, such as “the advanced key removed from vehicle warning”, use a beep sound and warning/indicator lights in the instrument cluster.
Refer to Warning and Beep Sounds on page 3-16.

*Some models.

Lighting Control

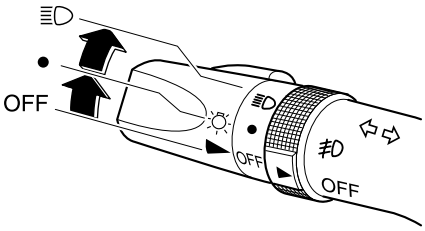

▼Headlights

To turn on the lights, turn the headlight switch on the end of the control lever.

Switch Position	OFF	●	≣D
Headlights	Off	Off	On
Taillights Parking lights License lights Side-marker lights Dashboard illumination	Off	On	On

NOTE

To prevent discharging the battery, don't leave the lights on while the engine is off unless safety requires them.

Xenon fusion headlight bulbs ✶

The low-beam bulbs of the headlights have xenon fusion bulbs that produce a bright white beam over a wide area.

⚠ WARNING

Do not replace the xenon fusion bulbs yourself:

Replacing the xenon fusion bulbs yourself is dangerous. Because the xenon fusion bulbs require high voltage, you could receive an electric shock if the bulbs are handled incorrectly. Consult an Authorized Mazda Dealer when the replacement is necessary.

NOTE

If the headlights flicker, or the brightness weakens, the bulb-life may be depleted and a replacement is necessary. Consult an Authorized Mazda Dealer.

▼Lights-On Reminder

If lights are on and the key is removed from the ignition switch, a continuous beep sound will be heard when the driver's door is opened.

NOTE

When the advanced keyless function is used and the start knob is in the ACC position, the Start Knob Not in Lock Warning Beep (page 3-16) overrides the lights-on reminder.

✶Some models.

▼Headlight High-Low Beam

Push the lever forward for high beam. Pull back to original position for low beam.

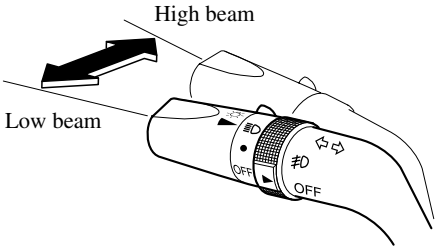

▼Flashing the Headlights

To flash the headlights, pull the lever fully toward you. The headlight switch does not need to be on, and the lever will return to the normal position when released.

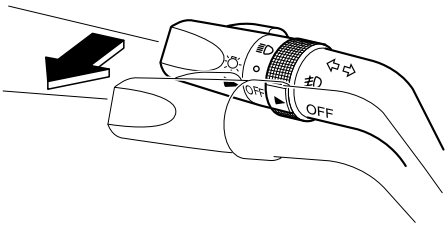

▼Headlight Leveling*

The number of passengers and weight of cargo in the luggage compartment change the angle of the headlights.

The angle of the headlights will be automatically adjusted when turning on the headlights.

Headlight auto-leveling malfunction indicator light

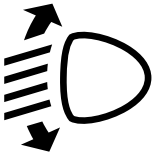

This indicator light stays on far a few seconds when the ignition switch is turned to the ON position.
Thereafter, the indicator light will illuminate when the headlight auto-leveling system has a malfunction.

If the indicator light illuminates, contact an Authorized Mazda Dealer.

▼Daytime Running Lights (Canada)

In Canada, vehicles must be driven with the headlights on during daytime operation.

For that reason, the daytime running lights automatically turn on when the ignition switch is turned to the ON position.

NOTE
The Daytime Running Lights turn off when the parking brake is applied.

*Some models.

Turn and Lane-Change Signals

▼Turn Signal

Move the signal lever down (for a left turn) or up (for a right turn) to the stop position. The signal will self-cancel after the turn is completed.

If the indicator light continues to flash after a turn, manually return the lever to its original position.

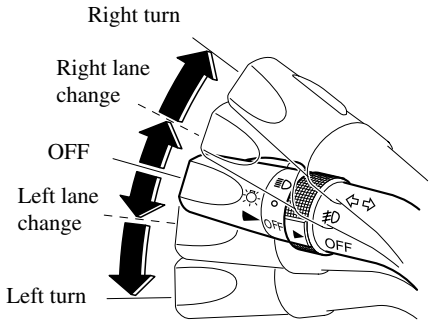

Green indicators on the dashboard show which signal is working.

Lane-change signals

Move the lever slightly toward the direction of the change —until the indicator flashes— and hold it there. It will return to the off position when released.

NOTE

If an indicator light stays on without flashing or if it flashes abnormally, one of the turn signal bulbs may be burned out.

Fog Lights*

Use this switch to turn on the fog lights. They help you to see as well as to be seen.

To turn the fog lights on, rotate the fog light switch to the position.
The headlight switch must be in the position to turn on the fog lights.

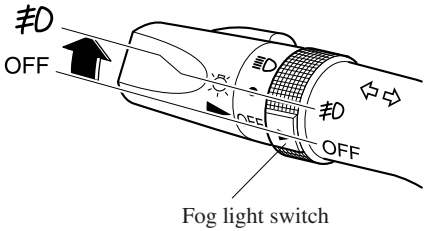

To turn them off, rotate the fog light switch to the OFF position or turn the headlight switch to the ● or OFF position.

NOTE

The fog lights will turn off when the headlights are set at high beam.

*Some models.

Windshield Wipers and Washer

The ignition switch must be in the ON position.

⚠ WARNING

Use only windshield washer fluid or plain water in the reservoir:

Using radiator antifreeze as washer fluid is dangerous. If sprayed on the windshield, it will dirty the windshield, affect your visibility, and could result in an accident.

Do not use the washer without first warming the windshield and never use plain tap water:

Using windshield washer fluid without anti-freeze protection in freezing temperatures is dangerous. The washer fluid could freeze on the windshield and block your vision. You could have an accident.

NOTE

Because heavy ice and snow can jam the wiper blades, the wiper motor is protected from motor breakdown, overheating and possible fire by a circuit breaker. This mechanism will automatically stop operation of the blades, but only for about 5 minutes.
If this happens, turn off the wiper switch and park off the right-of-way, and remove the snow and ice.
After 5 minutes, turn on the switch and the blades should operate normally. If they don't resume functioning, consult an Authorized Mazda Dealer as soon as possible. Drive to the side of the road and park off the right-of-way. Wait until the weather clears before trying to drive with the wipers inoperative.

▼Windshield Wipers

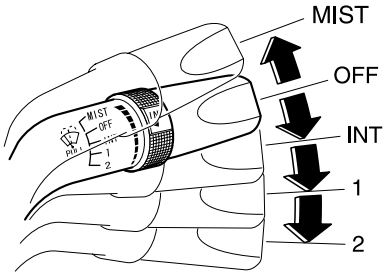

Turn the wipers on by pulling the lever down.
INT — Intermittent
1 — Low speed
2 — High speed

For a single wiping cycle, push the lever up to MIST.
MIST — Mist

<u>Variable-speed intermittent wipers</u>

Set the lever to INT and choose the interval timing by rotating the ring.

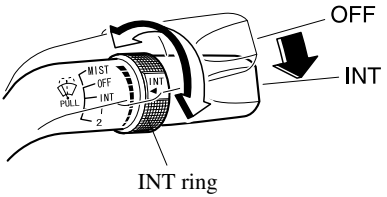

▼Windshield Washer

Pull the lever toward you and hold it to spray washer fluid.

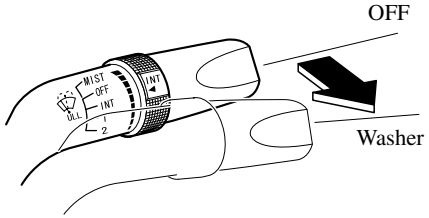

NOTE
With the wiper lever in the OFF or INT position, the wipers will operate continuously until the lever is released.

If the washer doesn't work, inspect the fluid level (page 8-16). If it's OK, consult an Authorized Mazda Dealer.

NOTE
(With headlight washers)
When the headlights are on, the headlight washers operate automatically once every fifth time the windshield washer operates.
Refer to Headlight Washer (page 5-59).

Headlight Washer*

The ignition switch must be in the ON position and the headlights must be turned on.

The headlight washers operate automatically once every fifth time the windshield washer operates.

If you want to operate only the headlight washers, pull the windshield wiper lever toward you twice rapidly.

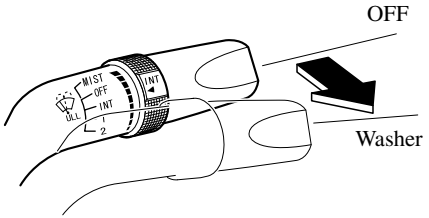

NOTE
When you pull the windshield wiper lever twice, the windshield washer may spray a little.

*Some models.

Rear Window Defroster

The rear window defroster clears frost, fog, and thin ice from the rear window.

The ignition switch must be in the ON position.

Press the switch to turn on the rear window defroster. The rear window defroster operates for about 15 minutes and turns off automatically.
The indicator light illuminates during operation.

To turn off the rear window defroster before the 15 minutes has elapsed, press the switch again.

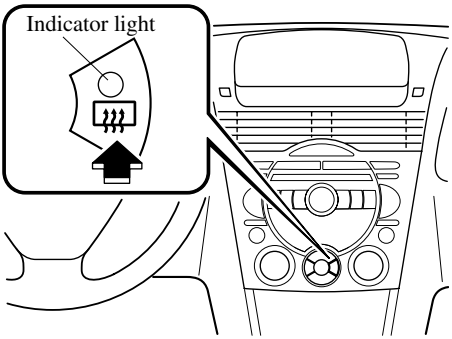

CAUTION

Don't use sharp instruments or window cleaners with abrasives to clean the inside of the rear window surface. They may damage the defroster grid inside the window.

NOTE
This defroster is not designed for melting snow. If there is an accumulation of snow on the rear window, remove it before using the defroster.

Horn

To sound the horn, press the mark on the steering wheel.

Hazard Warning Flasher

The hazard warning lights should always be used when you stop on or near a roadway in an emergency.

The hazard warning lights warn other drivers that your vehicle is a traffic hazard and that they must take extreme caution when near it.

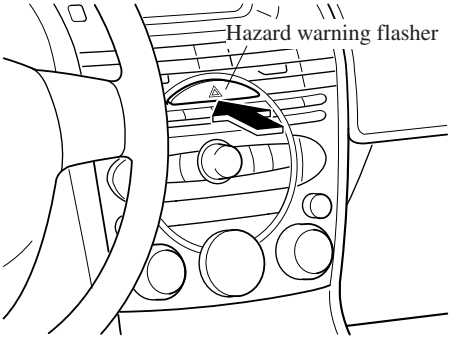

Depress the hazard warning flasher and all the turn signals will flash.

NOTE

- *The turn signals do not work when the hazard warning lights are on.*
- *Check local regulations about the use of hazard warning lights while the vehicle is being towed to verify that it is not in violation of the law.*

HomeLink Wireless Control System*

NOTE

HomeLink and HomeLink house are registered trademarks of Johnson Controls.

The HomeLink system replaces up to 3 hand-held transmitters with a single built-in component in the auto-dimming mirror. Pressing the HomeLink button on the auto-dimming mirror activates garage doors, gates and other devices surrounding your home.

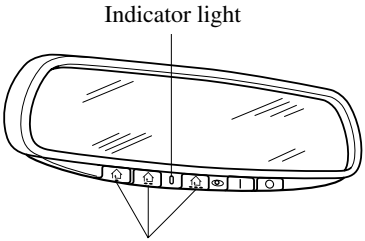

*Some models.

WARNING

Do not use the HomeLink system with any garage door opener that lacks the safety stop and reverse feature:

Using the HomeLink system with any garage door opener that lacks the safety stop and reverse feature as required by federal safety standards is dangerous. (This includes garage doors manufactured before April 1, 1982.)
Using these garage door openers can increase the risk of serious injury or death. For further information, contact HomeLink at 1-800-355-3515 or www.homelink.com or your Authorized Mazda Dealer.

Always check the areas surrounding garage doors and gates for people or obstructions before programming or during operation of the HomeLimk system:

Programming or operating the HomeLink system without verifying the safety of areas surrounding garage doors and gates is dangerous and could result in an unexpected accident and serious injury if someone were to be hit.

CAUTION

HomeLink has been tested and complies with FCC and Industry Canada rules. Changes or modifications not expressly approved by the party responsible for compliance could void the user's authority to operate the device.

NOTE

FCC ID: NZLSTDHL3
CANADA:4112104541A
This device complies with FCC rules part 15. Operation is subject to the following conditions:
1- This device may not cause any harmful interference and
2- This device must accept any interference that may be received including interference that may cause undesired operation.

NOTE

The programming will not be erased even if the battery is disconnected.

▼Pre-programming the HomeLink System

NOTE

It is recommended that a new battery be placed in the hand-held transmitter of the device being programmed to HomeLink for quicker training and accurate transmission of the radio-frequency signal.

- Verify that there is a remote control transmitter available for the device you would like to program.
- Disconnect the power to the device.

▼Programming the HomeLink System

CAUTION

When programming a garage door opener or a gate, disconnect the power to these devices before performing programming, as continuous operation of the devices could damage the motor.

The HomeLink system provides 3 buttons which can be individually selected and programmed using the transmitters for current, on-market devices as follows:

1. Press and hold the two outer HomeLink buttons (buttons one and three) — releasing only when the indicator light begins to flash (after 20 seconds). **Do not** hold the buttons for longer than 30 seconds and **do not repeat step 1** to program a second and/or third hand-held transmitter to the remaining two HomeLink buttons.
2. Position the end of your hand-held transmitter 2.5—7.5 cm (1—3 inches) away from the HomeLink button you wish to program while keeping the indicator light in view.
3. Simultaneously press and hold both the chosen HomeLink and hand-held transmitter buttons. **Do not release the buttons until step 4 has been completed.**

NOTE
Some gate operators and garage door openers may require you to replace this Programming Step 3 with procedures noted in the "Gate Operator/Canadian Programming" section.

4. After the HomeLink indicator light changes from a slow to a rapidly blinking light, release both the HomeLink and hand-held transmitter buttons.

NOTE
If the HomeLink indicator light does not change to a rapidly blinking light, contact HomeLink at ***www.homelink.com*** *or call* ***1-800-355-3515*** *for assistance.*

5. Press and hold the just-trained HomeLink button and observe the indicator light.

If the indicator light **stays on constantly, programming is complete** and your device should activate when the HomeLink button is pressed and released.

NOTE
To program the remaining two HomeLink buttons, begin with "Programming" ***— step 2. Do not repeat step 1.***

If the indicator light blinks **rapidly for two seconds and then turns to a constant light, continue with "Programming" steps 6—8** to complete the programming of a rolling code equipped device (most commonly a garage door opener).

6. At the garage door opener receiver (motor-head unit) in the garage, locate the "learn" or "smart" button. This can usually be found where the hanging antenna wire is attached to the motor-head unit.
7. Firmly press and release the "learn" or "smart" button. (The name and color of the button may vary by manufacturer.)

NOTE
There are 30 seconds in which to initiate step 8.

8. Return to the vehicle and firmly **press, hold for two seconds and release** the programmed HomeLink button. Repeat the "**press/hold/release**" sequence a second time, and, depending on the brand of the garage door opener (or other rolling code equipped device), repeat this sequence a third time to complete the programming process.

HomeLink should now activate your rolling code equipped device.

NOTE
To program the remaining two HomeLink buttons, begin with "Programming" ***— step 2. Do not repeat step 1.***

For questions or comments, please contact HomeLink at **www.homelink.com** or **1-800-355-3515.**

▼Gate operator/Canadian Programming

Canadian radio-frequency laws require transmitter signals to "time-out" (or quit) after several seconds of transmission — which may not be long enough for HomeLink to pick up the signal during programming. Similar to this Canadian law, some U.S. gate operators are designed to "time-out" in the same manner.

If you live in Canada or you are having difficulties programming a gate operator by using the "Programming" procedures (regardless of where you live), **replace "Programming HomeLink" step 3** with the following:

NOTE
If programming a garage door opener or gate operator, it is advised to unplug the device during the "cycling" process to prevent possible overheating.

Continue to press and hold the HomeLink button while you **press and release — every two seconds** ("cycle") your hand-held transmitter until the frequency signal has successfully been accepted by HomeLink. (The indicator light will flash slowly and then rapidly.)
Proceed with "Programming" step 4 to complete.

▼Operating the HomeLink System

Press the programmed HomeLink button to operate a programmed device. The code will continue being transmitted for a maximum of 20 seconds.

▼Reprogramming the HomeLink system

To program a device to HomeLink using a HomeLink button previously trained, follow these steps:

1. Press and hold the desired HomeLink button. **DO NOT** release the button.
2. The indicator light will begin to flash after 20 seconds. Without releasing the HomeLink button, proceed with "Programming" - step 2.

▼Erasing Programmed HomeLink Buttons

To erase the existing programming from all three operating channels, press and hold the two outside buttons (,) on the auto-dimming mirror until the HomeLink indicator light begins to flash after approximately 20 seconds.
Verify that the programming has been erased when you resell the vehicle.

6 Interior Comfort

Use of various features for drive comfort, including air-conditioning and audio system.

Climate Control System 6-2
Operating Tips 6-2
Vent Operation 6-3
Control Panel 6-5

Audio System 6-10
Antenna 6-10
Operating Tips for Audio System 6-10
Audio Set 6-21
Audio Control Switch Operation 6-40
Safety Certification 6-42

Interior Equipment 6-43
Sunvisors 6-43
Interior Lights 6-43
Information Display 6-45
Lighter 6-47
Ashtray 6-48
Cup Holder 6-49
Storage Compartments 6-50
Accessory Socket 6-53

Operating Tips

▼Operating the Climate Control System

Operate the climate control system with the engine running.

NOTE
To prevent the battery from being discharged, do not leave the fan control dial on for a long period of time with the ignition switch in the ACC position when the engine is not running.

▼Clearing the Air Inlet

Clear all obstructions like leaves, snow and ice from the hood and the air inlet in the cowl grille to improve the system efficiency.

▼Foggy Windows

The windows may fog up easily in humid weather. Use the climate control system to defog the windows.

To help defog the windows, operate the air conditioner to dehumidify the air.

NOTE
The air conditioner may be used along with the heater to dehumidify the air.

▼Outside/Recirculated Air Position

Use the outside air position in normal conditions. The recirculated air position should be used only when driving on dusty roads or for quick cooling of the interior.

▼Parking in Direct Sunlight

If the vehicle has been parked in direct sunlight during hot weather, open the windows to let warm air escape, then run the climate control system.

▼Not Using for a Long Period

Run the air conditioner about 10 minutes at least once a month to keep internal parts lubricated.

▼Check the Refrigerant before the Weather Gets Hot

Have the air conditioner checked before the weather gets hot. Lack of refrigerant may make the air conditioner less efficient. Consult an Authorized Mazda Dealer for refrigerant inspection.

The air conditioner is filled with HFC134a (R134a), a refrigerant that will not damage the ozone layer.
If the air conditioner is low on refrigerant or has a malfunction, consult an Authorized Mazda Dealer.

▼Replacement of the Cabin Air Filter

If your vehicle is equipped with an air filter for the air conditioner, it is necessary to change the filter periodically as indicated in scheduled maintenance (page 8-3). Consult an Authorized Mazda Dealer for replacement of the cabin air filter.

Vent Operation

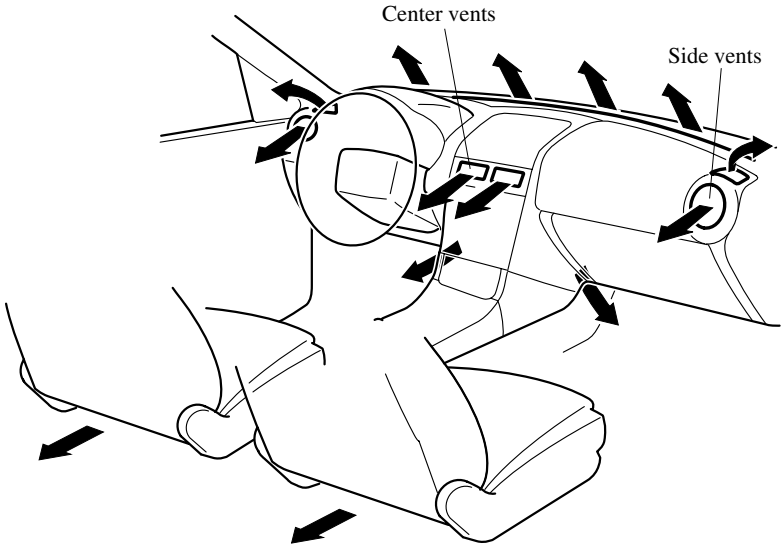

▼Adjusting the Vents

Directing airflow

Side Vents

To adjust the direction of airflow, open the vents and rotate them left and right.

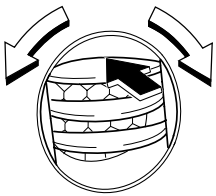

Center Vents

To adjust the direction of airflow, move the adjustment knob.

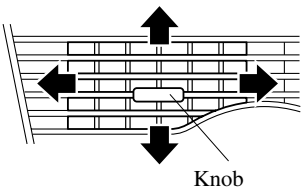

NOTE

When using the air conditioner, mist may come out from the vents. This is not a sign of trouble but a result of humid air being suddenly cooled.

▼Selecting the Airflow Mode

Dashboard Vents

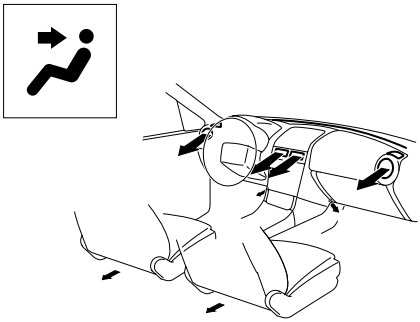

Defroster and Floor Vents

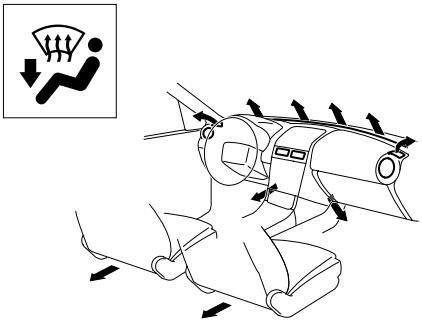

Dashboard and Floor Vents

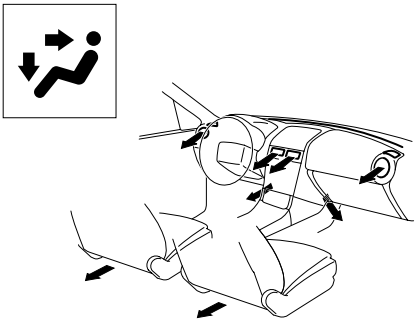

Defroster Vents

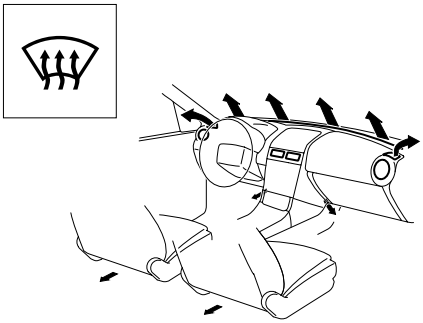

Floor Vents

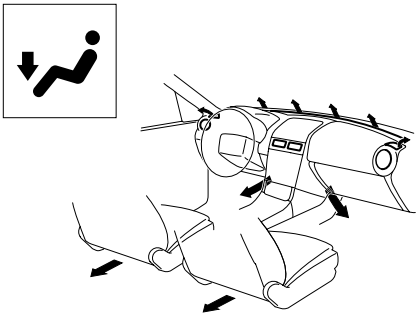

Control Panel

Climate control information is displayed on the information display.

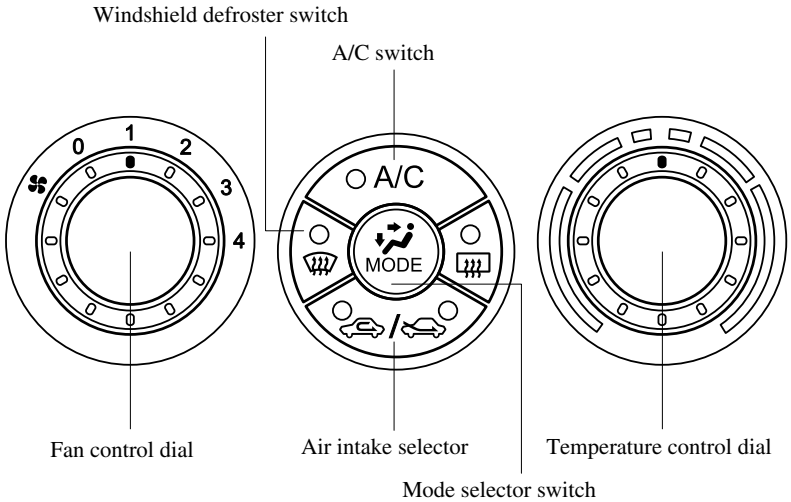

▼Control Switches

Temperature control dial

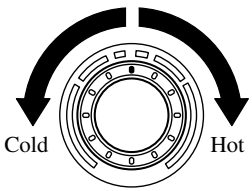

This dial controls temperature. Turn it clockwise for hot and counterclockwise for cold.

Fan control dial

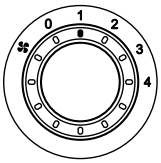

This dial allows variable fan speeds.
0—Fan off
1—Low speed
2—Medium low speed
3—Medium high speed
4—High speed

Mode selector switch

Press the mode selector switch to select airflow mode (page 6-4).

NOTE
To set the air vent to , press the windshield defroster switch.

A/C switch

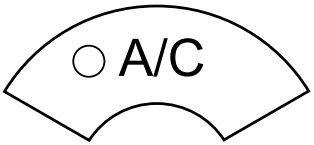

Push the A/C switch to turn the air conditioner on. The indicator light on the switch will illuminate when the fan control dial is set at position 1, 2, 3, or 4.

Push the switch once again to turn the air conditioner off.

NOTE
- *The air conditioner may not function when the outside temperature approaches 0 °C (32 °F).*
- ***(U.S.A., Canada)***
  When the mode is set to or with the fan control dial in a position other than 0 and the temperature control dial in the maximum cold position, the air intake selector switches to the recirculated air mode and the A/C turns on automatically. If A/C is not desired, press the A/C switch to turn it off.

Air intake selector

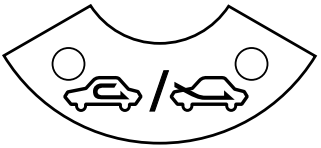

This switch controls the source of air entering the vehicle.

Press the switch to alternate between the and positions. The indicator light for the selected mode will illuminate.

It is recommended that under normal conditions the switch be kept in the outside air position.

Outside air position ( )

Outside air is taken into the vehicle. Use this position for normal ventilation and heating.

Recirculated air position ( )

Outside air is shut off. Air within the vehicle is recirculated.

This position can be used when driving on a dusty road or in similar conditions. It also helps to provide quicker cooling of the interior.

WARNING

Do not use the position in cold or rainy weather:

Using the position in cold or rainy weather is dangerous as it will cause the windows to fog up. Your vision will be hampered, which could lead to a serious accident.

Windshield defroster switch

Press the switch to defrost the windshield and front door windows.

▼Heating

1. Press the mode selector switch to the position.
2. Set the temperature control dial to the hot position.
3. Set the fan control dial to the desired speed.

NOTE

- *If the windshield fogs up easily, set the mode selector switch to the position.*
- *If cooler air is desired at face level, set the mode selector switch at the position and adjust the temperature control dial to maintain maximum comfort.*
- *The air to the floor is warmer than air to the face (except when the temperature control dial is set at the extreme hot or cold position).*
- *In the , , or position, the air conditioner is automatically turned on (however, the indicator light does not illuminate) and the position is automatically selected to defrost the windshield.*
  In the or position, the position cannot be changed to the position.

▼Cooling (With Air Conditioner)

1. Press the mode selector switch to the position.
2. Set the temperature control dial to the cold position.
3. Set the fan control dial to the desired speed.
4. Turn on the air conditioner by pressing the A/C switch.
5. Adjust the fan control dial and temperature control dial to maintain maximum comfort.

⚠ CAUTION

When using the air conditioner while driving up long hills or in heavy traffic, closely monitor the temperature gauge (page 5-36). The air conditioner may cause engine overheating. If the gauge indicates overheating, turn the air conditioner off (page 7-16).

NOTE

- *When maximum cooling is desired, set the temperature control dial to the extreme cold position and set the air intake selector to the position, then set the fan control dial to position 4.*
- *If warmer air is desired at floor level, set the mode selector switch at the position and adjust the temperature control dial to maintain maximum comfort.*
- *The air to the floor is warmer than air to the face (except when the temperature control dial is set at the extreme hot or cold position).*

▼Ventilation

1. Press the mode selector switch to the position.
2. Set the air intake selector to the position.
3. Set the temperature control dial to the desired position.
4. Set the fan control dial to the desired speed.

▼Windshield Defrosting and Defogging

1. Press the windshield defroster switch.
2. Set the temperature control dial to the desired position.
3. Set the fan control dial to the desired speed.

⚠ WARNING

Do not defog the windshield using the position with the temperature control set to the cold position:

Using the position with the temperature control set to the cold position is dangerous as it will cause the outside of the windshield to fog up. Your vision will be hampered, which could lead to a serious accident. Set the temperature control to the hot or warm position when using the position.

NOTE

- *For maximum defrosting, set the temperature control dial to the extreme hot position and the fan control dial to position 4.*
- *If warm air is desired at the floor, set the mode selector switch to the position.*
- *In the , , or position, the air conditioner is automatically turned on (however, the indicator light does not illuminate) and the position is automatically selected to defrost the windshield.*
  In the or position, the position cannot be changed to the position.

▼Dehumidifying (With Air Conditioner)

Operate the air conditioner in cool or cold weather to help defog the windshield and side windows.

1. Press the mode selector switch to the desired position.
2. Set the air intake selector to the position.
3. Set the temperature control dial to the desired position.
4. Set the fan control dial to the desired speed.
5. Turn on the air conditioner by pressing the A/C switch.

NOTE

One of the functions of the air conditioner is dehumidifying the air and, to use this function, the temperature does not have to be set to cold. Therefore, set the temperature control dial to the desired position (hot or cold) and turn on the air conditioner when you want to dehumidify the cabin air.

Antenna

▼Rear Window Antenna

The rear window antenna receives both AM and FM signals.

⚠ CAUTION

When washing the inside rear window, use a soft cloth dampened in lukewarm water, gently wiping the antenna lines.
Use of glass cleaning products could damage the antenna.

Operating Tips for Audio System

⚠ WARNING

Do not adjust the audio control switches while driving the vehicle:
Adjusting the audio while driving the vehicle is dangerous as it could distract your attention from the vehicle operation which could lead to a serious accident. Always adjust the audio while the vehicle is stopped. Even if the audio control switches are equipped on the steering wheel, learn to use the switches without looking down at them so that you can keep your maximum attention on the road while driving the vehicle.

⚠ CAUTION

For the purposes of safe driving, adjust the audio volume to a level that allows you to hear sounds outside of the vehicle.

NOTE

- *Do not use the audio for long periods of time while the engine is off. Otherwise the battery could go dead.*
- *If a cellular phone or CB radio is used in or near the vehicle, it could cause noise to occur from the audio system, however, this does not indicate that the system has been damaged.*

▼Radio Reception

AM characteristics

AM signals bend around such things as buildings or mountains and bounce off the ionosphere. Therefore, they can reach longer distances than FM signals. Because of this, two stations may sometimes be picked up on the same frequency at the same time.

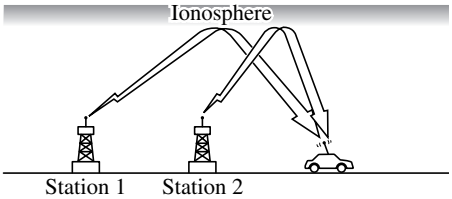

FM characteristics

An FM broadcast range is usually about 40—50 km (25—30 miles) from the source. Because of extra coding needed to break the sound into two channels, stereo FM has even less range than monaural (non-stereo) FM.

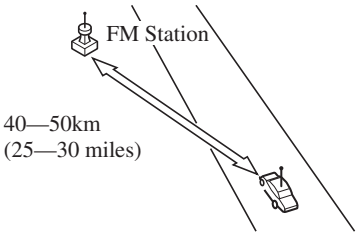

Signals from an FM transmitter are similar to beams of light because they do not bend around corners, but they do reflect. Unlike AM signals, FM signals cannot travel beyond the horizon. Therefore, FM stations cannot be received at the great distances possible with AM reception.

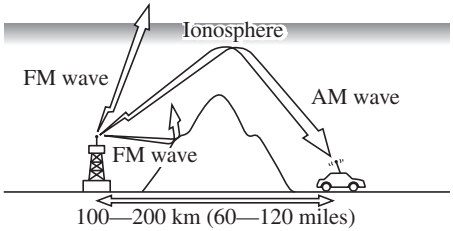

Atmospheric conditions can also affect FM reception. High humidity will cause poor reception. However, cloudy days may provide better reception than clear days.

Multipath noise

Since FM signals can be reflected by obstructions, it is possible to receive both the direct signal and the reflected signal at the same time. This causes a slight delay in reception and may be heard as a broken sound or a distortion. This problem may also be encountered when in close proximity to the transmitter.

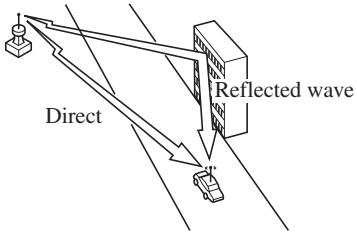

Flutter/Skip noise

Signals from an FM transmitter move in straight lines and become weak in valleys between tall buildings, mountains, and other obstacles. When a vehicle passes through such an area, the reception conditions may change suddenly, resulting in annoying noise.

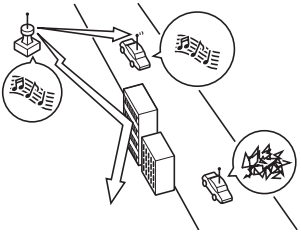

Weak signal noise

In suburban areas, broadcast signals become weak because of distance from the transmitter. Reception in such fringe areas is characterized by sound breakup.

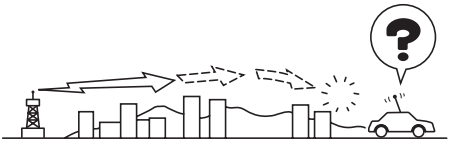

Strong signal noise

This occurs very close to a transmitter tower. The broadcast signals are extremely strong, so the result is noise and sound breakup at the radio receiver.

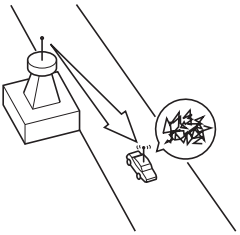

Station drift noise

When a vehicle reaches the area of two strong stations broadcasting at similar frequencies, the original station may be temporarily lost and the second station picked up. At this time there will be some noise from this disturbance.

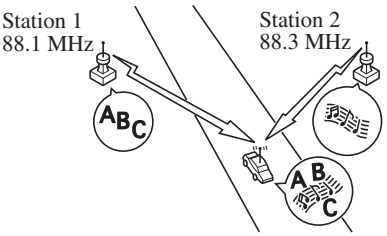

▼Operating Tips for Cassette Tape Player

Cleaning the cassette tape player

The tape head, capstans, and pinch rollers will gather oxide residue from cassette tapes. This can cause weak or wavering sounds and damage to the cassette tapes and player. Use a good quality head-cleaning tape or a liquid cleaner cassette tape to remove it.
Should the unit not operate normally, consult an Authorized Mazda Dealer. Never attempt to repair it or insert a screwdriver or anything else.

Handling the cassette tape player

The following precautions should be observed.

- Do not spill any liquid on the audio system.

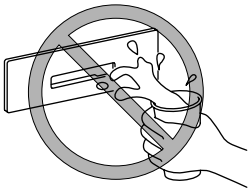

- Do not insert any objects, other than cassette tape, into the slot.

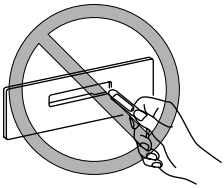

- If the cassette tape is loose, it may produce poor sound or performance during playback. Use a pencil or something similar to remove any slack.

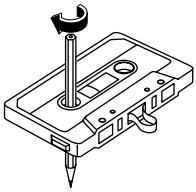

- Only cassette tapes that play no longer than 90 minutes should be used. Cassette tape exceeding 90 minutes are thin and may easily break.
- Do not leave a cassette tape in the tape player slot when not in use. Remove it completely to permit the slot door to close and to protect the mechanism from dust.
- Store cassette tapes away from extreme heat, magnetic fields, and direct sunlight. Protect the exposed cassette tape from dirt and damage. Store cassette tapes in their original cases or other protective cases.

▼Operating Tips for CD Player/In-Dash CD Changer

Condensation phenomenon

Immediately after turning on the heater when the vehicle is cold, the CD or optical components (prism and lens) in the CD player/In-dash CD changer may become clouded with condensation. At this time, the CD will eject immediately when placed in the unit. A clouded CD can be corrected simply by wiping it with a soft cloth. Clouded optical components will clear naturally in about an hour. Wait for normal operation to return before attempting to use the unit.

Handling the CD player/In-dash CD changer

The following precautions should be observed.

- Do not spill any liquid on the audio system.

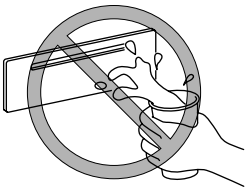

- Do not insert any objects, other than CDs, into the slot.

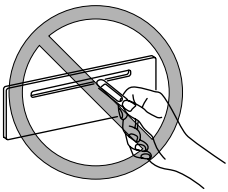

- The CD revolves at high speed within the unit. Defective (cracked or badly bent) CDs should never be used.

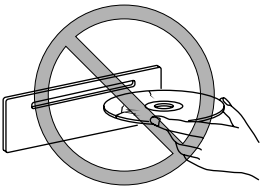

- Do not use non-conventional discs such as heart-shaped, octagonal discs, etc. The disc may not eject resulting in a malfunction.

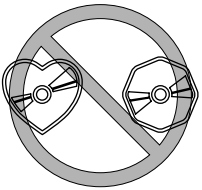

- If the memory portion of the CD is transparent or translucent, do not use the disc.

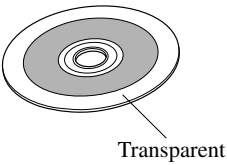

- A new CD may have rough edges on its inner and outer perimeters. If a disc with rough edges is used, proper setting will not be possible and the CD player/In-dash CD changer will not play the CD. In addition, the disc may not eject resulting in a malfunction. Remove the rough edges in advance by using a ball-point pen or pencil as shown below. To remove the rough edges, rub the side of the pen or pencil against the inner and outer perimeter of the CD.

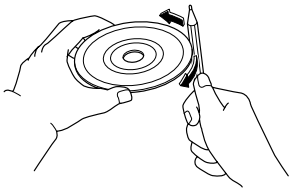

- When driving over uneven surfaces, the sound may jump.

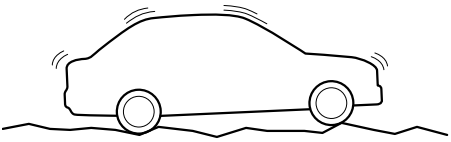

- The CD player/In-dash CD changer has been designed to play CDs bearing the identification logo as shown. No other discs can be played.
- Use discs that have been legitimately produced. If illegally-copied discs such as pirated discs are used, the system may not operate properly.

CD Player

Music CD player (non-MP3 compatible)

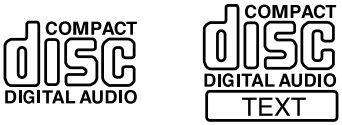

Music CD/MP3 CD player (MP3 compatible)

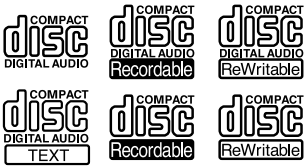

In-dash CD Changer

- Be sure never to touch the signal surface when handling the CDs. Pick up a CD by grasping the outer edge or the edge of the hole and the outer edge.

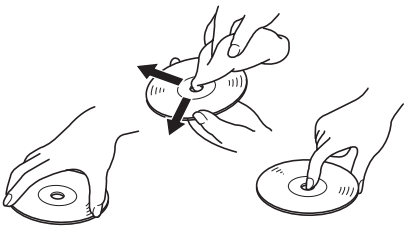

- Do not stick paper or tape on the CD. Avoid scratching the reverse side (the side without a label). The disc may not eject resulting in a malfunction.
- Dust, finger smudges, and dirt can decrease the amount of light reflected from the signal surface, thus affecting sound quality. If the CD should become soiled, gently wipe it with a soft cloth from the center of the CD to the edge.
- Do not use record sprays, antistatic agents, or household spray cleaners. Volatile chemicals such as benzine and thinner can also damage the surface of the CD and must not be used. Anything that can damage, warp, or fog plastic should never be used to clean CDs.
- Insert discs one by one. If two discs are inserted at the same time, the system may not operate properly.
- The CD player/In-dash CD changer ejects the CD if the CD is inserted upside down. Also dirty and/or defective CDs may be ejected.
- An 8 cm (3 in) CD cannot be played in the CD player even if an 8 cm (3 in) CD adapter is used.
  The In-dash CD changer is specially made for 12 cm (5 in) CDs.
  An 8 cm (3 in) CD cannot be played in the In-dash CD changer even if an 8 cm (3 in) CD adapter is used.
- Do not insert cleaning discs in the CD player/In-dash CD changer.
- Do not insert any disc with a peel-off seal affixed to it.

Handling the CD player (MP3 compatible type)

- This unit may not be able to play certain CD-R/CD-RWs made using a computer or music CD recorder due to disc characteristics, scratches, smudges, dirt, etc., or due to dust or condensation on the lens inside the unit.
- Storing CDs in the vehicle exposed to direct sunlight or high temperature may damage the CD-R/CD-RWs, and make them unplayable.
- CD-R/CD-RW exceeding 700 MB cannot be played.
- This unit may not be able to play certain discs made using a computer due to the application (writing software) setting used. (For details, consult the store where the application was purchased.)
- It is possible that certain text data, such as titles, recorded on a CD-R/CD-RW may not be displayed when musical data (CD-DA) is playing.
- The period from when a CD-RW is inserted to when it begins playing is longer than a normal CD or CD-R.
- Completely read the instruction manual and cautions for CD-R/CD-RWs.
- Do not use discs with cellophane tape adhering, partially peeled off labels, or adhesive material exuding from the edges of the CD label. Also, do not use discs with a commercially-available CD-R label affixed. The disc may not eject resulting in a malfunction.

▼Operating tips for MP3

NOTE

Supply of this product only conveys a license for private, non-commercial use and does not convey a license nor imply any right to use this product in any commercial (i.e. revenue-generating) real time broadcasting (terrestrial, satellite, cable and/or any other media), broadcasting/streaming via the Internet, intranets and/or other networks or in other electronic content distribution systems, such as pay-audio or audio-on-demand applications. An independent license for such use is required. For details, please visit http://www.mp3licensing.com.

- This audio system handles MP3 files that have been recorded on CD-R/CD-RW/CD-ROMs. Discs that have been recorded using the following formats can be played:
  - ISO 9660 level 1
  - ISO 9660 level 2
  - Joliet extended format
  - Romeo extended format
- This unit handles MP3 files conforming to the MP3 format containing both header frames and data frames.
- This unit can play multi-session recorded discs that have up to 40 sessions.
- This unit can play MP3s with sampling frequencies of 16/22.05/24/32/44.1/48 kHz.
- This unit can play MP3 files that have been recorded in bit rates of 8 kbps to 320 kbps. Nonetheless, to insure enjoyment of music with consistent sound quality, it is recommended to use discs that have been recorded at a bit rate of 128 kbps or more.
- If a disc has both music data (CD-DA) and MP3 files, playback of the two file types differs depending on how the disc was recorded.
- Packet written discs cannot be played on this unit.
- This unit does not play CDs recorded using MP3i (MP3 interactive), MP3 PRO and RIFF MP3 formats.

About folders and files

- The order of hierarchy for MP3 files and folders during playback or other functions is from shallow to deep. The arrangement and playing order of a recorded disc containing MP3 files is as follows:
  - File number
    A numerical file number is assigned to each file in a folder in the order of hierarchy from shallow to deep.
  - Folder number
    A numerical folder number is assigned to each folder in the order of hierarchy from shallow to deep.

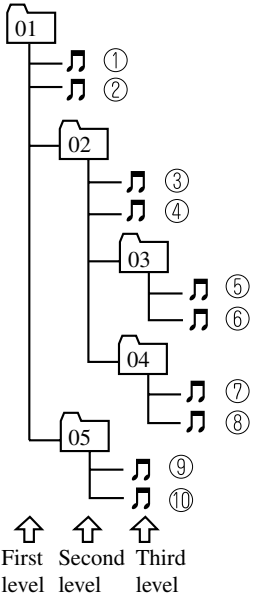

- The folder order is automatically assigned and this order cannot be optionally set.
- Any folder without an MP3 file will be ignored. (It will be skipped and the folder number will not be displayed.)
- MP3 files not conforming to the MP3 format containing both header frames and data frames will be skipped and not played.
- This unit will play MP3 files that have up to eight levels. However, the more levels a disc has, the longer it will take to initially start playing. It is recommended to record discs with two levels or less.
- A single disc with up to 253 folder can be played and a single folder with up to 255 files can be played.
- When naming an MP3 file, be sure to add an MP3 file extension (.mp3) after the file name.
- The maximum number of characters that can be used for file names is as follows. However, this unit will only display up to 30 characters, including the file extension (.mp3).

	Maximum number of characters in a file name (including a separator "." and the three letters of the file extension)
ISO9660 level 1	12*
ISO9660 level 2	31*
Joliet extended format	64
Romeo extended format	128

* English one-byte characters (capitalized only) and underbar "_" are available.

⚠ CAUTION

This unit can only play MP3 files that have an MP3 file extension (.mp3) attached. Do not attach an MP3 file extension to any other type file as it could cause noise to be emitted or a malfunction in the unit.

About ID3 Tag display

- This unit can only display ID3 Tag album, track and artist names that have been input using Ver.1.0/1.1/2.2/2.3 formats. Any other data that may have been input cannot be displayed.
- This unit can only display English (including numerals) one-byte characters. Use only English (including numerals) one-byte characters when inputting ID3 tags. Two-byte characters and some special symbols cannot be displayed.

Specialized glossary

MP3

Abbreviation for “MPEG Audio Layer 3”. A technical standard for audio compression as decided by an ISO (International Organization for Standardization) MPEG working group. Use of MP3 allows for audio data to be compressed to approximately a tenth of the source data size.

ISO 9660

An international standard for logical formatting of CD-ROM files and folders. It is divided into three separate levels based on differences in file naming procedures, data configuration and other characteristics.

Multi-session

A session is the complete amount of data recorded from the beginning to the end of a single period of CD-ROM, CD-R/CD-RW data recording. Multi-session refers to the existence of data from two or more sessions on a single disc.

Sampling

Refers to the process of encoding analog audio data at regular intervals and converting it to digital data. The sampling rate refers to the number of times a sample is taken in one second and is expressed in Hz units. Increasing the sampling rate improves the sound quality but also increases the data size.

Bit rate

Refers to the volume of data per second, expressed in bps (bits per second). Generally, the larger the number of the transfer bit rate when compressing an MP3 file, the more information regarding musical reproduction it carries, and therefore the better the sound quality.

Packet writing

A general term for the method, similar to that used for floppy discs or hard drives, of recording the required file in a single increment on a CD-R and similar.

ID3 Tag

ID3 tag is a method for storing information related to the music in an MP3 file. Information such as track, artist and album name can be stored. This content can be freely edited using ID3 editing function software.

VBR

Abbreviation for Variable Bit Rate. While CBR (Constant Bit Rate) is generally used, VBR varies the bit rate for audio compression according to compression conditions and this allows for compression with preference given to sound quality.

MEMO

Audio Set

- Audio information is displayed on the information display.
- There are two types of CD players. Check which CD player your vehicle is equipped with.

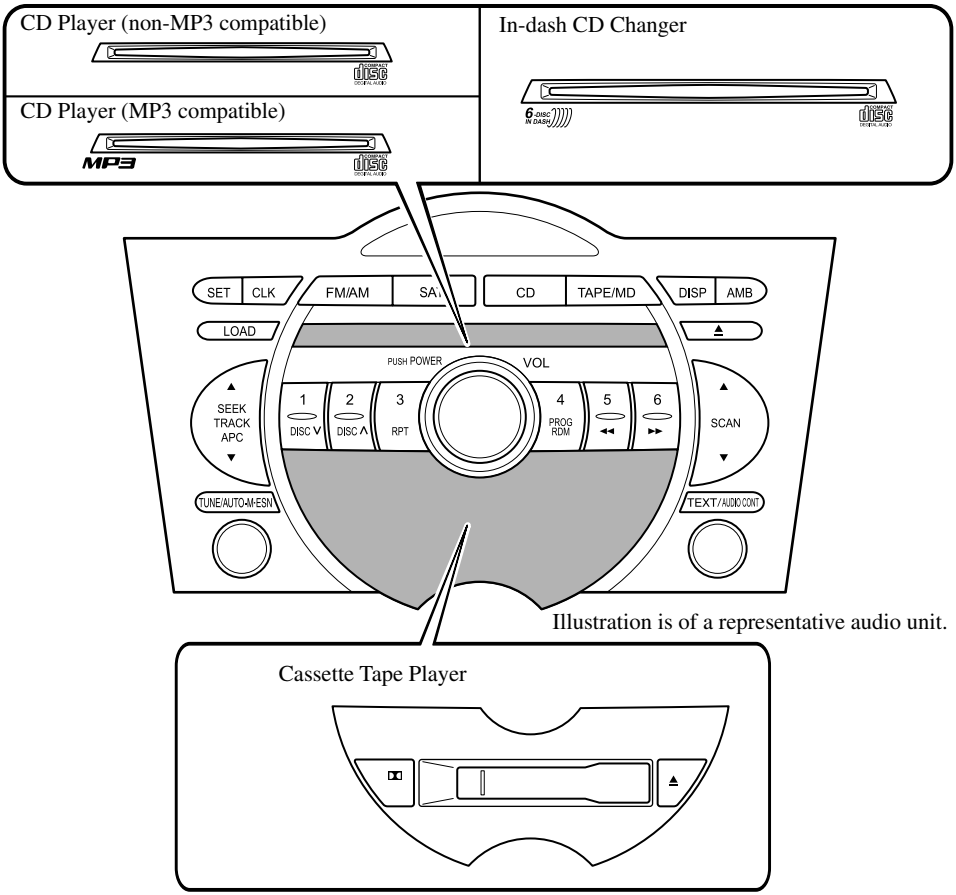

Illustration is of a representative audio unit.

Power/Volume/Sound Controls ..... page 6-22
Operating the Radio ..... page 6-26
Operating the Cassette Tape Player ..... page 6-30
Operating the Compact Disc (CD) Player ..... page 6-32
Operating the In-Dash CD Changer ..... page 6-36
Error Indications ..... page 6-39

▼Power/Volume/Sound Controls

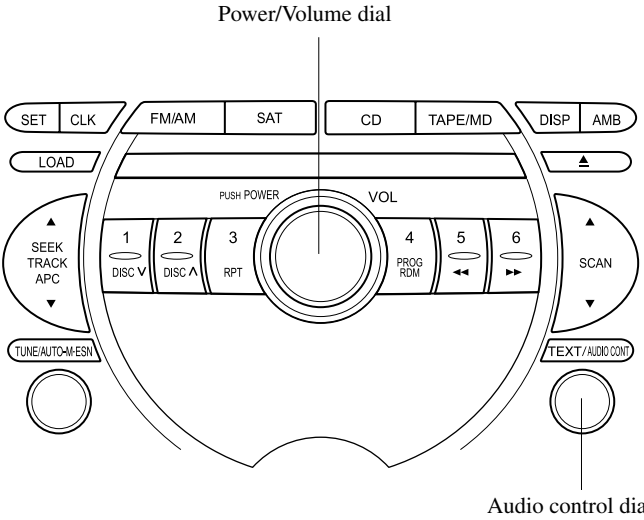

Illustration is of a representative audio unit.

Power ON/OFF

Turn the ignition switch to the ACC or ON position.

Press the power/volume dial to turn the audio system on.
Press the power/volume dial again to turn the audio system off.

NOTE
To prevent the battery from being discharged, do not leave the audio system on for a long period of time when the engine is not running.

Volume adjustment

To adjust the volume, turn the power/volume dial.

Turn the power/volume dial to the right to increase volume, to the left to decrease it.

Audio sound adjustment

1. Press the audio control dial to select the function. The selected function will be indicated.

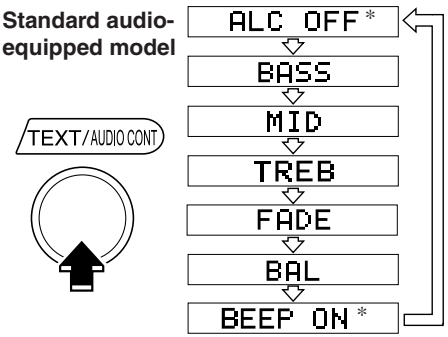

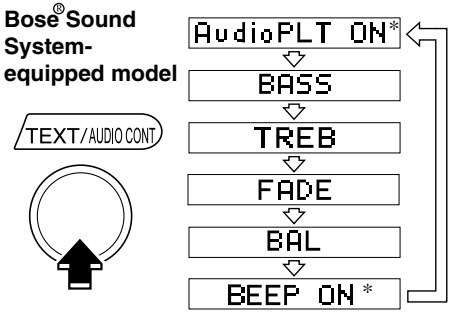

* Depending on the mode selected, the indication changes.

2. Turn the audio control dial to adjust the selected functions as follows:

Standard audio-equipped model

Indication	Turn Left	Turn Right
ALC	Select mode	
BASS	Decrease bass	Increase bass
MID	Decrease mid-range	Increase mid-range
TREB	Decrease treble	Increase treble
FADE	Shift the sound to the front	Shift the sound to the rear
BAL	Shift the sound to the left	Shift the sound to the right
BEEP	OFF	ON

Bose® Sound System-equipped model

Indication	Turn Left	Turn Right
AudioPLT	OFF	ON
BASS	Decrease bass	Increase bass
TREB	Decrease treble	Increase treble
FADE	Shift the sound to the front	Shift the sound to the rear
BAL	Shift the sound to the left	Shift the sound to the right
BEEP	OFF	ON

NOTE

About 5 seconds after selecting any mode, the volume function will be automatically selected. To reset bass, mid-range, treble, fade, and balance, press the audio control dial for 2 seconds. The unit will beep and "CLEAR" will be displayed.

Automatic Level Control (ALC)

(Standard audio-equipped model)

The automatic level control is a feature that automatically adjusts audio volume and sound quality according to the vehicle speed.
The volume increases in accordance with the increase in vehicle speed, and decreases as vehicle speed decreases.

The following four modes are available. Select the desired mode.

Mode	Volume change
ALC OFF	No change
ALC LEVEL1	Minimum
ALC LEVEL2	Medium
ALC LEVEL3	Maximum

Turn the audio control dial to select ALC OFF or ALC LEVEL1—3 modes. The selected mode will be indicated.

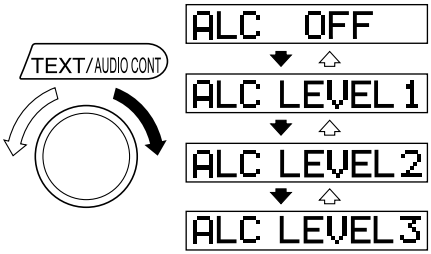

***AudioPilot® (Bose® Sound System-equipped model)**

AudioPilot automatically adjusts audio volume and sound quality in accordance with the level of noise entering the vehicle interior while driving. When AudioPilot is turned ON, the system automatically calculates the conditions for optimum hearing of sound which may be difficult to hear depending on exterior noise.

* AudioPilot® is a registered trademark of Bose Corporation.

BEEP setting

The beep-sound when operating the audio system can be set on or off.

MEMO

▼Operating the Radio

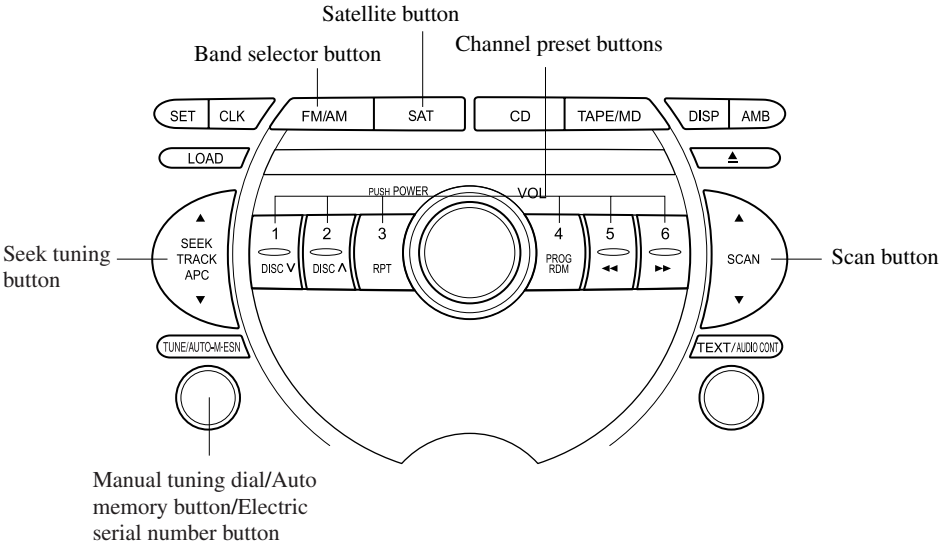

Radio ON

Press a band selector button (**FM/AM**) to turn the radio on.

Band selection

Successively pressing the band selector button (**FM/AM**) switches the bands as follows: FM1→FM2→AM.

The selected mode will be indicated. If FM stereo is being received, “ST” will be displayed.

NOTE

If the FM broadcast signal becomes weak, reception automatically changes from STEREO to MONO for reduced noise, and the “ST” indicator will go out.

Tuning

The radio has the following tuning methods: Manual, Seek, Scan, Preset channel, and Auto memory tuning. The easiest way to tune stations is to set them on preset channels.

NOTE

If the power supply is interrupted (fuse blows or the battery is disconnected), the preset channels will be canceled.

Manual tuning

Turning the manual tuning dial will change the frequency higher or lower.

Seek tuning

Pressing the seek tuning button (▲ , ▼) will cause the tuner to seek a higher or lower frequency automatically.

NOTE
If you continue to press and hold the button, the frequency will continue changing without stopping.

Scan tuning

Press the scan button (▲ , ▼) to automatically sample strong stations. Scanning stops at each station for about 5 seconds. To hold a station, press the scan button (▲ , ▼) again during this interval.

Preset channel tuning

The 6 preset channels can be used to store 6 AM and 12 FM stations.

1. To set a channel first select AM, FM1, or FM2. Tune to the desired station.
2. Depress a channel preset button for about 2 seconds until a beep sound is heard. The preset channel number and station frequency will be displayed. The station is now held in the memory.
3. Repeat this operation for the other stations and bands you want to store. To tune one in the memory, select AM, FM1, or FM2 and then press its channel preset button. The station frequency and the channel number will be displayed.

NOTE
If the power supply is interrupted (fuse blows or the battery is disconnected), the preset channels will be canceled.

Auto memory tuning

This is especially useful when driving in an area where the local stations are not known. Additional AM/FM stations can be stored without disturbing the previously set channels.

Press and hold the auto memory button (AUTO-M) for about 2 seconds until a beep sound is heard; the system will automatically scan and temporarily store up to 6 stations with the strongest frequencies in each selected band in that area.

After scanning is completed, the station with the strongest frequency will be tuned and its frequency displayed.
Press and release the auto memory button (AUTO-M) to recall stations from the auto-stored stations. One stored station will be selected each time; its frequency and channel number will be displayed.

NOTE
If no stations can be tuned after scanning operations, “A” will be displayed.

SATELLITE RADIO (SAT)

Vehicles equipped with the separately purchased SIRIUS digital satellite radio unit have the ability to receive channels of digital quality programming coast to coast via satellite. For information on use, read the Satellite Radio Kit manual accompanying the SIRIUS digital satellite radio unit. A subscription to SIRIUS digital satellite radio service is required (available in the U.S. - Except Alaska and Hawaii) to enable this feature once the separately purchased SIRIUS digital satellite radio unit has been installed. For subscription and channel information, or for digital satellite radio technical issues, contact SIRIUS directly at:

- Web: www.siriusradio.com
- Phone (24 hrs/day, 7 days/week): 888-539-SIRI (7474)
- E-mail: customercare@sirius-radio.com
- Mailing Address: Sirius Satellite Radio

1221 Avenue Of The Americas
New York, NY 10020
Attention: Customer Care

Include your Sirius Radio ESN (Electronic Serial Number) when subscribing or requesting technical assistance. See the Satellite Radio Kit manual accompanying the SIRIUS unit for complete satellite radio activation procedures and information on how to display the ESN#.

MEMO

▼Operating the Cassette Tape Player*

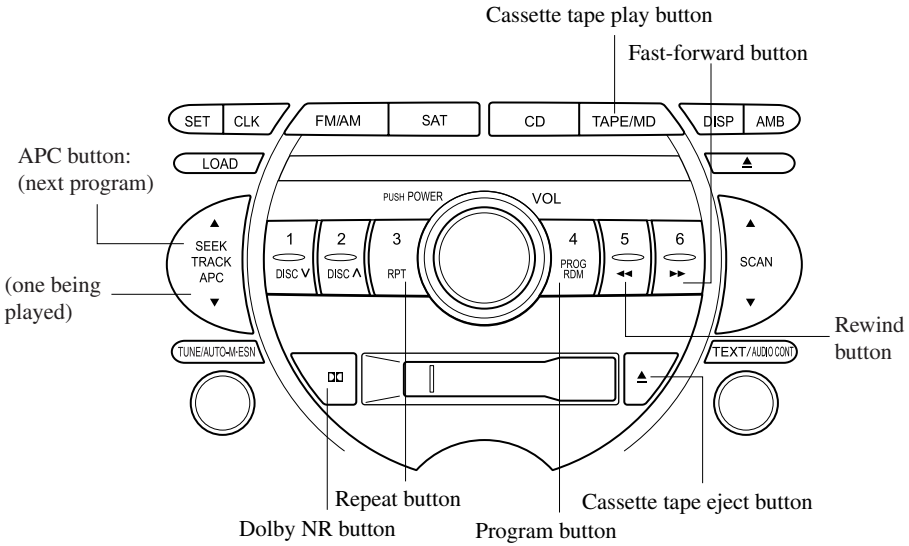

Illustration is of a representative audio unit.

Cassette tape insert

Insert the cassette tape into the slot, open edge to the right and cassette tape will begin play, and "TAPE PLAY" will be displayed. At the end of the cassette tape, the unit automatically reverses cassette tape play. When ▲ is lit, the cassette tape's top side is playing. When ▼ is lit, the bottom side is on.

Playing

Press the cassette tape play button (**TAPE/MD**) to start play when a cassette tape is in the unit. If there isn't a cassette tape in the unit when the cassette tape play button (**TAPE/MD**) is pressed, "NO TAPE" will flash on and off.

Dolby noise reduction

When using a tape with Dolby NR*, push the Dolby NR button (DD). The DD symbol will be displayed. To play a tape without Dolby NR, push the button once again.

* Noise reduction system manufactured under license from Dolby Laboratories Licensing Corporation.
Dolby and the double-D symbol DD are trademarks of Dolby Laboratories Licensing Corporation.

Ejecting the cassette tape

Press the cassette tape eject button (⏏) to eject the cassette tape.

NOTE

The cassette tape can be ejected when the ignition switch is in the OFF position.

*Some models.

Fast-forward/Rewind

Press the fast-forward button (►►) to fast-forward.
Press the rewind button (◄◄) to rewind.
To stop this operation and play the cassette tape, press the button again.

NOTE
When the cassette tape ends during fast-forward or rewind, it automatically stops and starts playing.

Reversing

Press the program button (PROG) to change cassette tape-play direction.

NOTE
When the cassette tape ends, the unit automatically reverses play.

Automatic program control (APC)

APC is used to find the beginning of either the next program or the one being played.

Press the APC button (▲) to the beginning of the next selection.
Press the APC button (▼) to the beginning of the one being played. To stop this operation and play the cassette tape, press the button again.

NOTE
APC may not operate properly if:
- *A tape was recorded at a low level.*
- *A tape has long, silent intervals.*
- *A tape is a live recording.*
- *A tape has very short intervals of less than 3 seconds.*

Repeat play

This operation makes it possible to listen to a selection repeatedly.

Press the repeat button (RPT) during play.
The current selection playing will be repeated (“RPT” will be displayed).
Press the repeat button (RPT) once again to cancel repeat play.

NOTE
RPT may not operate properly if:
- *A tape was recorded at a low level.*
- *A tape has long, silent intervals.*
- *A tape is a live recording.*
- *A tape has very short intervals of less than 3 seconds.*

▼Operating the Compact Disc (CD) Player*

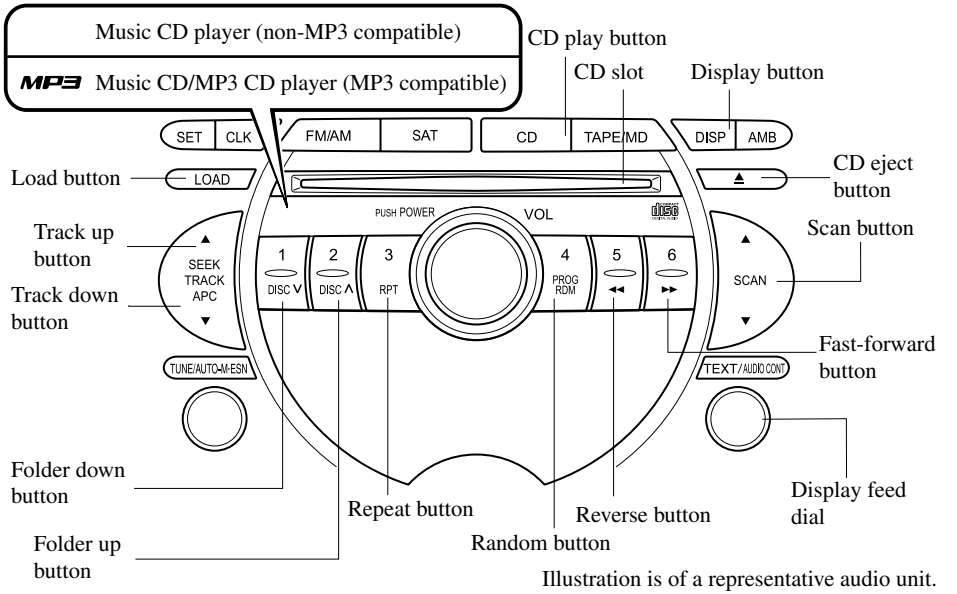

Illustration is of a representative audio unit.

There are two types of CD players. Check which CD player your vehicle is equipped with.

Type	Playable data
Music CD player (non-MP3 compatible)	· Music data (CD-DA)
Music CD/MP3 CD player (MP3 compatible)	· Music data (CD-DA) · MP3 file

NOTE

If a disc has both music data (CD-DA) and MP3 files, playback of the two file types differs depending on how the disc was recorded.

Inserting the CD

Insert the CD into the slot, label-side up. The auto-loading mechanism will set the CD and begin play. There will be a short lapse before play begins while the player reads the digital signals on the CD.

Ejecting the CD

Press the CD eject button (⏏) to eject the CD.

Playback

Press the CD play button (CD) to start play when a CD is in the unit.
If a CD is not in the unit when the CD play button (CD) is pressed, “NO DISC” will flash on and off.

NOTE

When the load button (LOAD) is pressed, the CD will load and play even if the CD eject button (⏏) had been previously pressed.

*Some models.

Fast-forward/Reverse

Press and hold the fast-forward button (►►) to advance through a track at high speed.
Press and hold the reverse button (◄◄) to reverse through a track at high speed.

Track search

Press the track up button (▲) once to skip forward to the beginning of the next track.
Press the track down button (▼) once to skip back to the beginning of the current track.

Folder search (during MP3 CD playback)

To change to the previous folder, press the folder down button (DISC∨), or press the folder up button (DISC∧) to advance to the next folder.

Music scan

This feature helps to find a program by playing about the first 10 seconds of each track.

Press the scan button (▲ , ▼) during playback to start the scan play operation (the track number will flash).
Press the scan button (▲ , ▼) again to cancel scan playback.

NOTE
If the unit is left in scan, normal playback will resume where scan was selected.

Repeat playback

This feature makes it possible to listen to a selection repeatedly.

Press the repeat button (RPT) during playback. The current selection will be repeated (“RPT” will be displayed).
Press the repeat button (RPT) once again to cancel repeat playback.

Random playback

This feature allows the CD player to randomly select the order of the songs.

Press the random button (RDM) during play. The next selection will be randomly selected (“RDM” will be displayed).
Press the random button (RDM) once again to cancel random playback.

Switching the display (MP3 compatible type)

Each time the display button (DISP) is pressed during playback, the display will switch in the following order.
Music CD

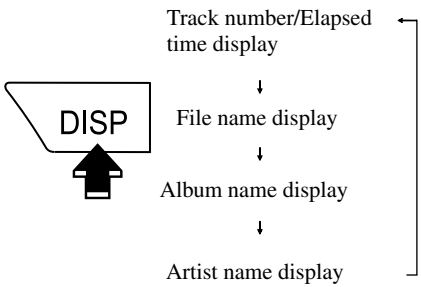

MP3 CD

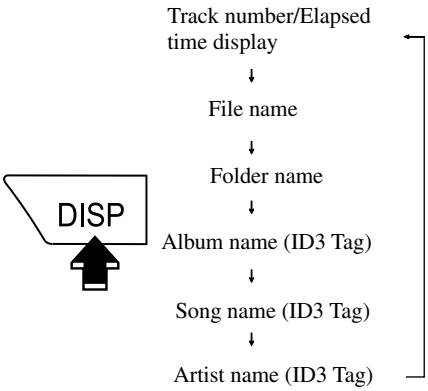

NOTE
(MP3 CD)
This unit can only read English (including numerals) one-byte characters. Depending on the CD writing software used, proper display may not be possible.

Display scroll (MP3 compatible type)

Only 12 characters can be displayed at one time. To display the rest of the characters of a long title, turn the display feed dial (TEXT) to the right. Hidden titles can be scrolled into the display one character at a time.

NOTE
The displayable number of characters is limited. If the number of characters, including the file extension (.mp3), exceeds 32 characters, it may not be fully displayed.

Message display

If “CHECK CD” is displayed, it means that there is some CD malfunction. Check the CD for damage, dirt, or smudges, and then properly reinsert. If the message appears again, take the unit to an Authorized Mazda Dealer for service.

MEMO

▼Operating the In-Dash CD Changer*

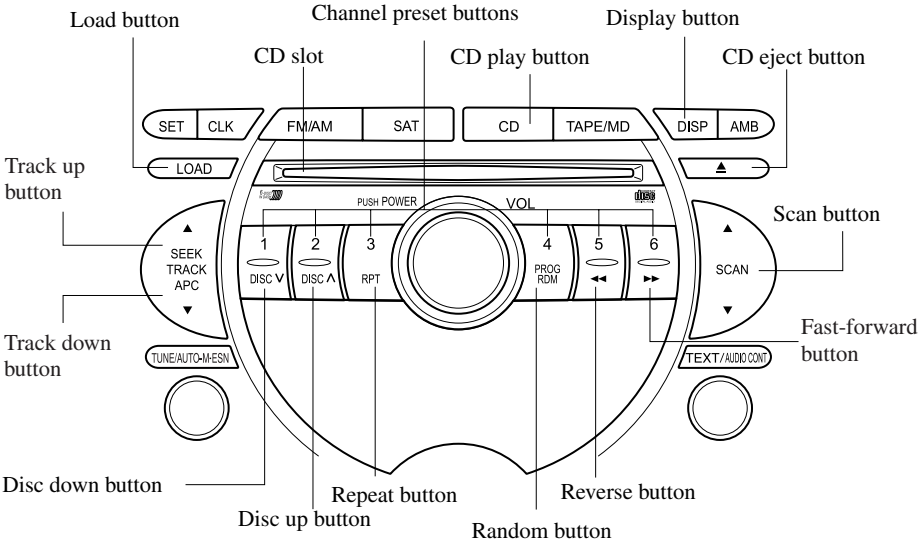

Illustration is of a representative audio unit.

Inserting the CD

The CD must be label-side up when inserting. The auto-loading mechanism will set the CD and begin play. There will be a short lapse before play begins while the player reads the digital signals on the CD.
The disc number and the track number will be displayed.

NOTE
A CD cannot be inserted while the display reads "WAIT". A beeping sound can be heard during this waiting time. Simultaneously pressing the power/volume dial and the load button (LOAD) for about 2 seconds will turn this beeping sound ON or OFF.

Normal insertion

1. Press the load button (LOAD).
2. When "IN" is displayed, insert the CD.

Inserting CDs into desired tray number

1. Press and hold the load button (LOAD) for about 2 seconds until a beep sound is heard.
2. Press the channel preset button for the desired tray number within 3 seconds after the beep sound is heard.
3. When "IN" is displayed, insert the CD.

NOTE
The CD cannot be inserted to the desired tray number if the number is already occupied.

Multiple insertion

1. Press and hold the load button (LOAD) for about 2 seconds until a beep sound is heard.

*Some models.

2. Wait 3 seconds or press the load button (LOAD) again within 3 seconds after the beep sound is heard.
3. When “IN” is displayed, insert the CD.
4. When “IN” is displayed again, insert the next CD.

NOTE
The first-inserted CD will be played automatically when:
- *No other CD is inserted within 15 seconds after “IN” is displayed.*
- *The CD trays are full.*

Displaying the CD-inserted tray number

When you want to know the number for a CD-inserted tray, press the display button (DISP). The tray number will be displayed for 5 seconds.

Ejecting the CD

Normal ejection

1. Press the CD eject button (⏏). The disc number and “DISC OUT” will be displayed.
2. Pull out the CD.

NOTE
When the CD is ejected during play, the next CD will be played automatically.

Ejecting CDs from desired tray number

1. Press and hold the CD eject button (⏏) for about 2 seconds until a beep sound is heard.
2. Press the channel preset button for the desired CD number within 3 seconds after the beep sound is heard.
3. Pull out the CD.

Multiple ejection

1. Press and hold the CD eject button (⏏) for about 2 seconds until a beep sound is heard.
2. Wait 3 seconds or press the CD eject button (⏏) again within 3 seconds after the beep sound is heard.
3. Pull out the CD, then the next CD will be ejected.

NOTE
- *CDs will be ejected starting with the one with the lowest number.*
- *All CDs in the tray will be ejected continuously.*
- *CDs can be ejected when the ignition switch is off. Press and hold the CD eject button (⏏) for about 2 seconds and all CDs will eject.*

Playback

Press the CD play button (CD) to start play when a CD is in the unit.
If a CD is not in the unit when the CD play button (CD) is pressed, “NO DISC” will flash on and off.

Fast-forward/Reverse

Press and hold the fast-forward button (►►) to advance through a track at high speed.
Press and hold the reverse button (◄◄) to reverse through a track at high speed.

Track search

Press the track up button (▲) once to skip forward to the beginning of the next track.
Press the track down button (▼) once to skip back to the beginning of the current track.

Disc search

Press the disc up button (DISC∧) to skip forward to the beginning of the next CD.
Press the disc down button (DISC∨) to skip back to the beginning of the previous CD.

Music scan

This feature helps to find a program by playing about the first 10 seconds of each track.

Press the scan button (▲ , ▼) during playback to start the scan play operation (the track number will flash).
Press the scan button (▲ , ▼) again to cancel scan playback.

NOTE
If the unit is left in scan, normal playback will resume where scan was selected.

Repeat playback

This feature makes it possible to listen to a selection repeatedly.

Press the repeat button (RPT) during play. The current selection will be repeated (“RPT” will be displayed).
Press the repeat button (RPT) once again to cancel repeat playback.

Random playback

This feature allows the CD player to randomly select the order of the songs.

Press the random button (RDM) during play. The next selection will be randomly selected (“RDM” will be displayed).
Press the random button (RDM) once again to cancel random playback.

▼Error Indications

If you see an error indication on the display, find the cause in the chart. If you cannot clear the error indication, take the vehicle to an Authorized Mazda Dealer.

Indication	Cause	Solution
CHECK CD	CD is inserted upside down	Insert the CD properly. If the error indication does not disappear, consult an Authorized Mazda Dealer
	CD is defective	Insert another CD properly. If the error indication does not disappear, consult an Authorized Mazda Dealer

Audio Control Switch Operation

When the audio unit is turned on, operation of the audio unit from the steering wheel is possible.

NOTE

Because the audio unit will be turned off under the following conditions, the switches will be inoperable.

- *When the ignition switch is turned to the LOCK position.*
- *When the power button on the audio unit is pressed and the audio unit is turned off.*
- *When a cassette tape/CD being played is ejected. (For the In-dash CD changer, when all CDs are ejected.)*

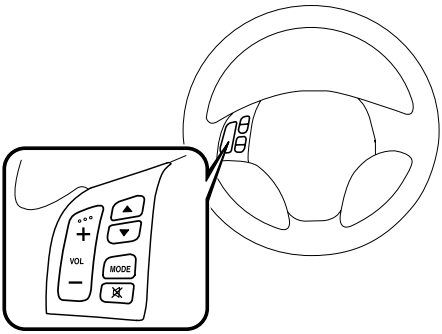

NOTE

Mazda has installed this system to prevent distraction while driving the vehicle and using audio controls on the dashboard.
Always make safe driving your first priority.

▼Adjusting the Volume

To increase the volume, press the volume button (**+**).

To decrease the volume, press the volume button (**–**).

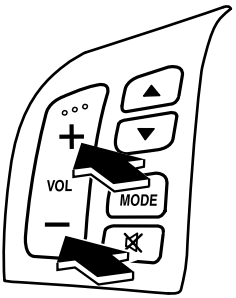

▼Changing the Source

Press the mode switch (**MODE**) to change the audio source (FM1 radio> FM2 radio> AM radio> CD player or CD changer> Cassette tape player> SIRIUS1> SIRIUS2> SIRIUS3> cyclical).

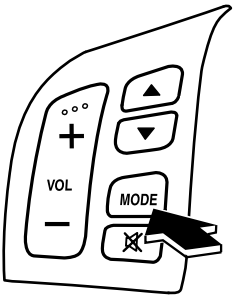

NOTE
Cassette tape, CD, CD changer, and SIRIUS digital satellite radio modes cannot be selected in the following cases:
- *A cassette deck, CD, CD changer, or SIRIUS digital satellite radio unit is not equipped on the audio system.*
- *A cassette tape, or CD has not been inserted.*

▼Seek Switch

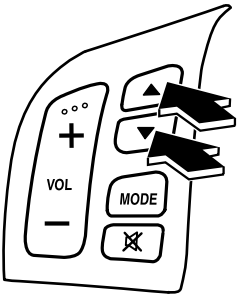

When listening to the radio

Press the seek switch (▲ , ▼), the radio switches to the next/previous stored station in the order that it was stored (1—6).

Press the seek switch (▲ , ▼) for about 2 seconds until a beep sound is heard to seek all usable stations at a higher or lower frequency whether programmed or not.

When playing a cassette tape

Press the seek switch (▲), release, and it will advance to the next selection.
Press the seek switch (▼), release, and it will repeat the selection being played.

When playing a CD

Press the seek switch (▲) to skip to the next track.
Press the seek switch (▼) to repeat the current track.

▼Mute Switch

Press the mute switch (🔇) once to mute audio, press it again to resume audio output.

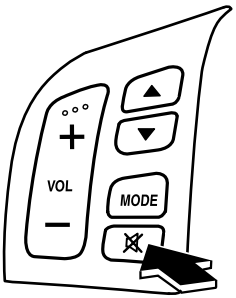

Safety Certification

This CD player is made and tested to meet exacting safety standards. It meets FCC requirements and complies with safety performance standards of the U.S. Department of Health and Human Services.

CAUTION

- *This CD player should not be adjusted or repaired by anyone except qualified service personnel.*
  If servicing is required, contact an Authorized Mazda Dealer.
- *Use of controls or adjustments or performance of procedures other than those specified herein may result in hazardous laser exposure. Never operate the CD player with the top case of the unit removed.*
- *Changes or modifications not expressly approved by the party responsible for compliance could void the user's authority to operate this equipment.*

NOTE

For CD player section:
This device complies with part 15 of the FCC Rules. Operation is subject to the following two conditions: (1) This device may not cause harmful interference, and (2) this device must accept any interference received, including interference that may cause undesired operation.

NOTE

This equipment has been tested and found to comply with the limits for a Class B digital device, pursuant to part 15 of the FCC Rules. These limits are designed to provide reasonable protection against harmful interference in a residential installation. This equipment generates, uses, and can radiate radio frequency energy and, if not installed and used in accordance with the instructions, may cause harmful interference to radio communications. However, there is no guarantee that interference will not occur in a particular installation.

Sunvisors

When you need a sunvisor, lower it for use in front or swing it to the side.

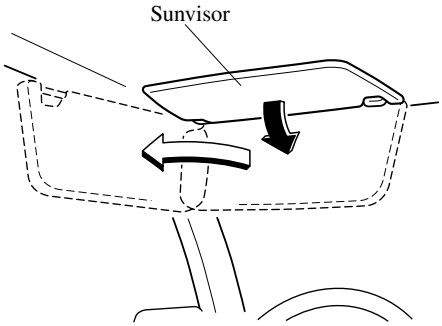

▼Vanity Mirrors

To use the vanity mirror, lower the sunvisor.
The vanity mirror light will illuminate when you open the cover.

Interior Lights

▼Illuminated Entry System

When the illuminated entry system operates, the overhead light (switch is in the DOOR position) and the courtesy lights turn on for:

- About 30 seconds after the driver's door is unlocked and the ignition switch is in the LOCK position (with the ignition key removed).
- About 15 seconds after all doors are closed (If your vehicle is equipped with the advanced key, the overhead light turns on for about 5 seconds when the advanced key is outside of the vehicle).
- About 15 seconds after the ignition switch is in the LOCK position (with the ignition key removed) with all doors closed.

The light also turns off when:

- The ignition switch is turned to the ON position and all doors are closed.
- The driver's door is locked.

NOTE

Battery saver

If any door is left opened, the light goes out after about 30 minutes to save the battery. The light turns on again when the ignition switch is turned to the ON position, or when any door is opened after all doors have been closed.

▼Overhead Lights

Front

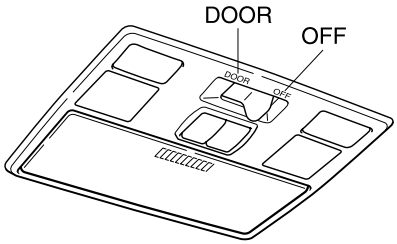

Switch Position	Front Overhead Lights
OFF	Light off
DOOR	• Light is on when any door is open • Light is on or off when the illuminated entry system is on

Rear

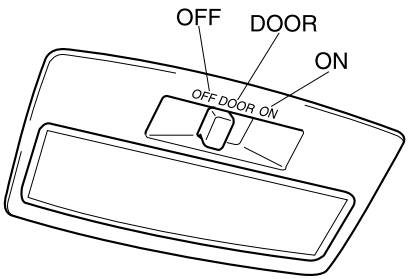

Switch Position	Rear Overhead Lights
OFF	Light off
DOOR	Light is on when any door is open
	Light is on or off when the illuminated entry system is on
ON	Light on

▼Map Lights

The map lights are switched on or off by pressing the switches.

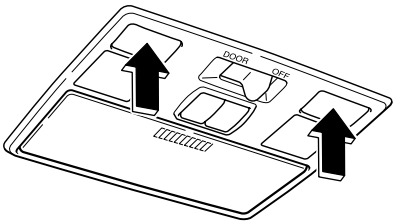

▼Courtesy Lights

Turns on when any door is open or the illuminated entry system is on.

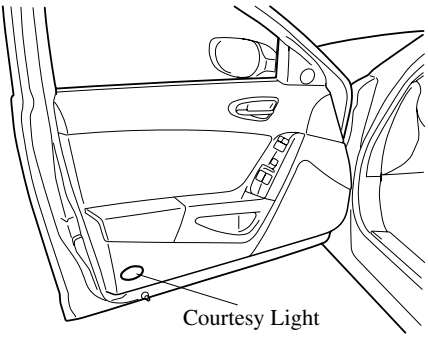

Information Display

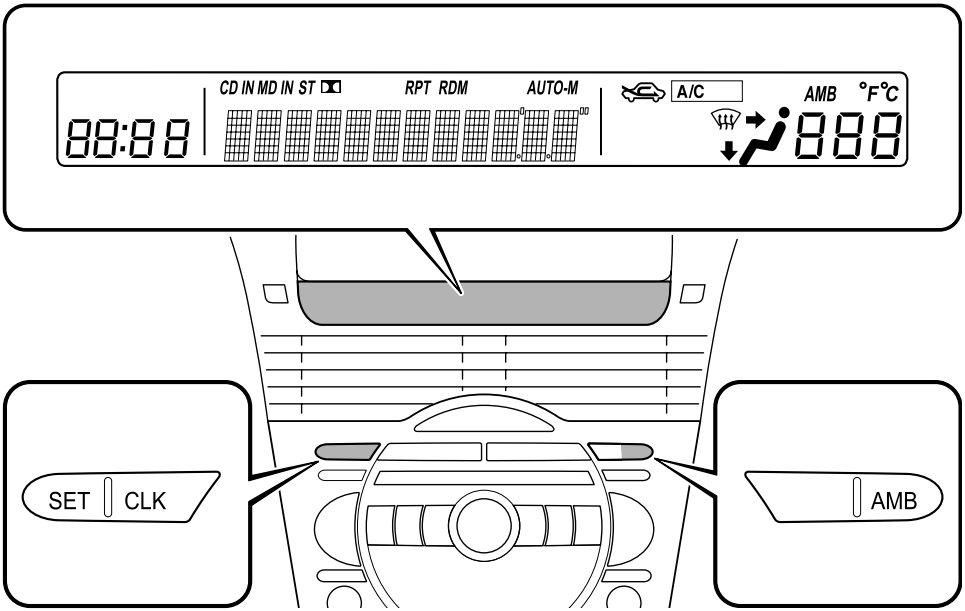

▼Information Display Functions

The information display has the following functions:

- Clock
- Ambient Temperature Display (Outside Temperature Display)
- Climate Control Display
- Audio Display

▼Clock

When the ignition switch is in the ACC or ON position, the time is displayed.

Time setting

1. Press the CLK switch until a beep sounds, and “12Hr” and “24Hr” will be displayed.
2. Press the SET switch to switch between “12Hr” and “24Hr” displays. The selected display will flash.
   To select the desired clock setting, press the CLK switch again while the preferred setting is flashing.
3. “Hr. ADJUST” will be displayed next, and the hour portion of the display will flash. Press the SET switch to set the hour, then press the CLK switch.
4. “Min. ADJUST” will be displayed next, and the minutes portion of the display will flash. Press the SET switch to set the minutes, then press the CLK switch.

Time resetting

While the clock is displayed, press the SET switch 1.5 seconds or more. When the switch is released, a beep will sound and the clock will be reset as follows:
(Example)

12:01—12:29→12:00
12:30—12:59→1:00

NOTE
When the SET switch is released, the seconds are reset to “00”.

▼Ambient Temperature Display

When the ignition switch is in the ON position, press the AMB switch to display the ambient temperature.

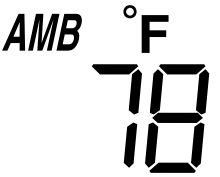

NOTE
- *Under the following conditions, the ambient temperature display may differ from the actual ambient temperature depending on the surroundings and vehicle conditions:*
  - *Significantly cold or hot temperatures.*
  - *Sudden changes in ambient temperature.*
  - *The vehicle is parked.*
  - *The vehicle is driven at low speeds.*
- *Press the AMB switch a few seconds or more to switch the display from Fahrenheit to Centigrade or vice versa.*

▼Climate Control Display

The climate control system status is displayed. To operate the climate control system, refer to “Climate Control System” (page 6-2).

▼Audio Display

The audio system status is displayed. To operate the audio system, refer to “Audio System” (page 6-10).

Lighter

The ignition switch must be in the ACC or ON position.

1. Open the cover.

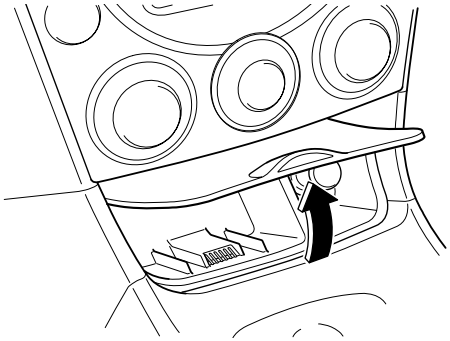

2. Press the lighter in and release it. When ready for use, it automatically pops out.

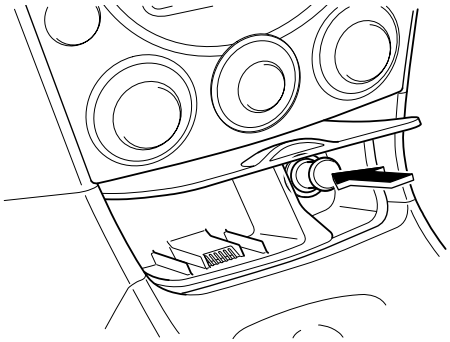

⚠ CAUTION

- *Don't touch the metal part of the lighter, you may burn yourself.*
- *Don't hold the lighter in because it will overheat.*
- *Don't use the lighter socket for plug-in accessories such as shavers and coffee pots. They may damage it or cause electrical failure. Use only a genuine Mazda lighter or the equivalent.*
- *If the lighter doesn't pop out within 30 seconds, remove it to prevent overheating.*

Ashtray

⚠ CAUTION

Do not use the ashtray for trash. You might start a fire.

To use, open the cover.

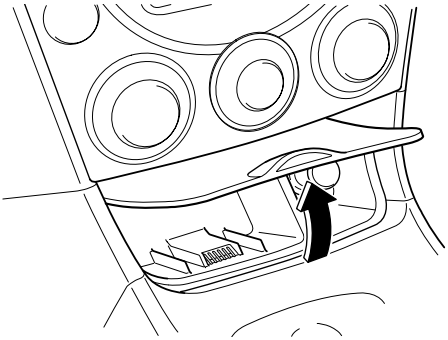

To remove, open the cover and pull up the ashtray.

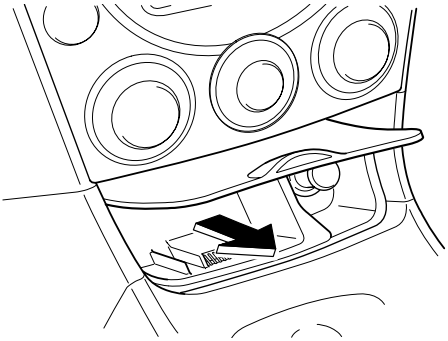

Cup Holder

WARNING

Never use a cup holder to hold hot liquids while the vehicle is moving:

Using a cup holder to hold hot liquids while the vehicle is moving is dangerous. If the contents spill, you could be scalded.

Do not put anything other than cups or drink cans in cup holders:

Putting objects other than cups or drink cans in a cup holder is dangerous.
During sudden braking or maneuvering, occupants could be hit and injured, or objects could be thrown around the vehicle, causing interference with the driver and the possibility of an accident. Only use a cup holder for cups or drink cans.

CAUTION

To reduce the possibility of injury in an accident or a sudden stop, keep cup holders closed when not in use.

▼Front

To use, slide the lid while pushing the button until you hear a click sound.

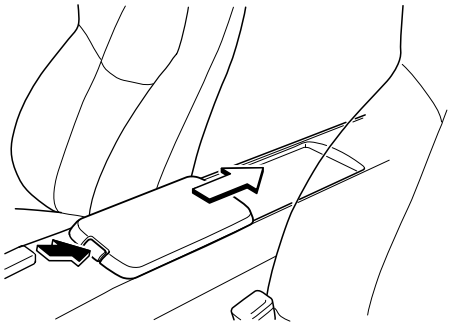

CAUTION

Do not use a cup holder with the lid unlocked. During sudden braking or maneuvering, the lid could slide forward causing the cup contents to spill.

▼Rear

To use, pull the lid up.

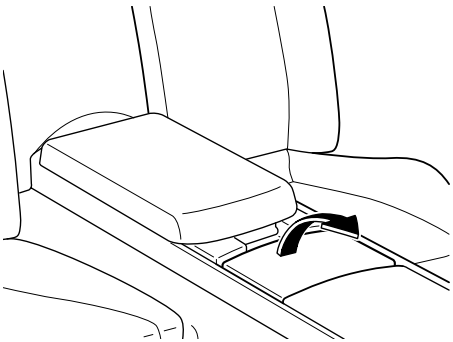

Storage Compartments

⚠ WARNING

Keep storage boxes closed when driving:

Driving with the storage boxes open is dangerous. To reduce the possibility of injury in an accident or a sudden stop, keep the storage boxes closed when driving.

⚠ CAUTION

Do not leave lighters or eyeglasses in the storage boxes while parked under the sun. A lighter could explode or the plastic material in eyeglasses could deform and crack from high temperature.

▼Overhead Console

This console box is designed to store accessories. Push and release to open.

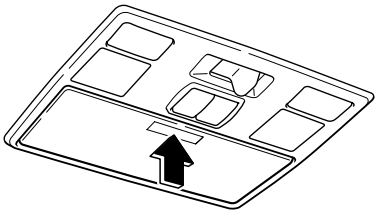

▼Coin Box

To open, press the release catch down and pull the lid downward.

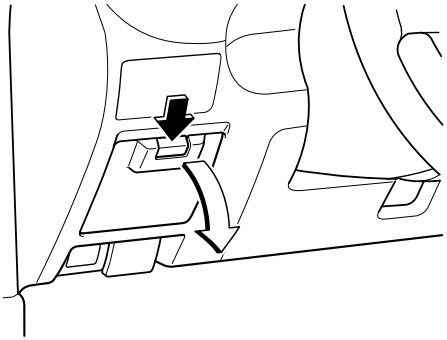

▼Glove Box

To open the glove box, pull the latch toward you.
Insert the key (auxiliary key*) and turn it clockwise to lock, counterclockwise to unlock.
* Advanced key equipped vehicle

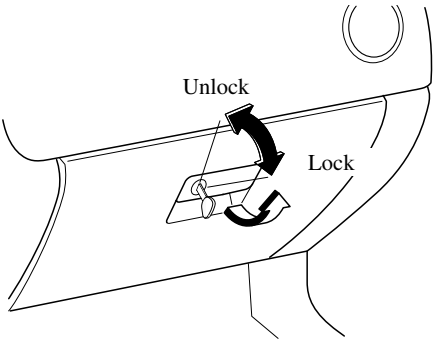

▼Center Console

Front

1. Slide the lid while pushing the button until you hear a click sound.

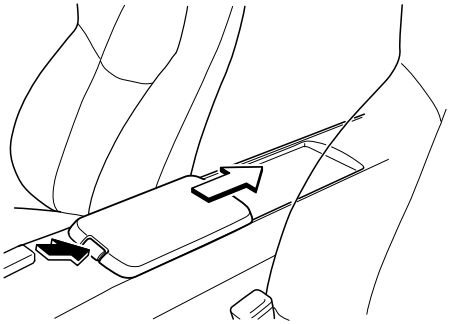

2. Open the lid.

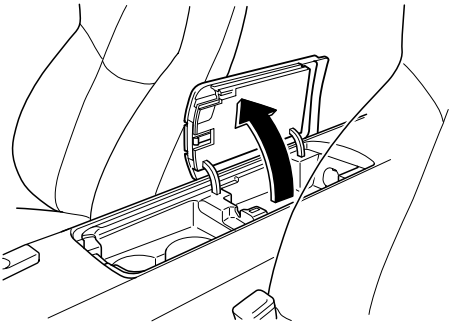

Rear

To open, pull the release catch.

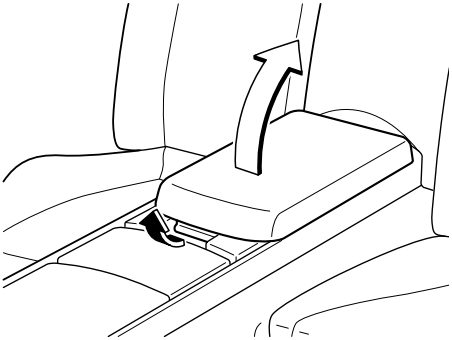

⚠ CAUTION

Do not place bottles filled with fluid (e.g. cosmetic fragrance) in the console box. If the fluid leaks, it could damage the navigation system or the electrical wiring, or both.

▼Storage Box

The storage box is designed to store accessories.

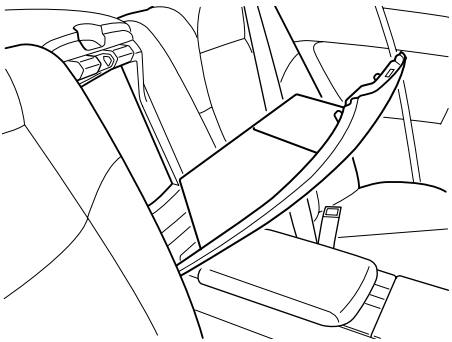

To open, squeeze the latch and pull the lid down.
When closing the storage box, put the storage box back in its original position until you hear a click sound.

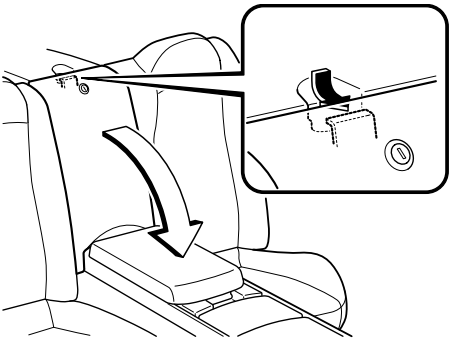

NOTE
When using the storage box to store heavy accessories, remove the storage box before placing or removing the accessories.

Insert the key (auxiliary key*) and turn it clockwise to lock, counterclockwise to unlock.
* Advanced key equipped vehicle

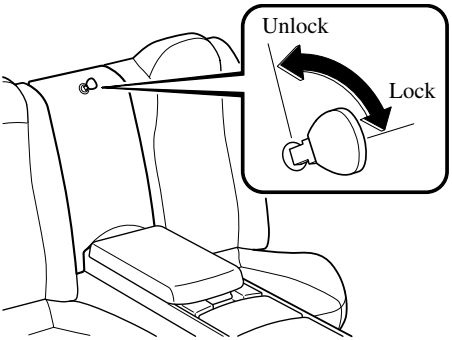

Loading long objects with storage box removed

The storage box can be removed for convenient loading of long objects such as skis placed through the trunk.

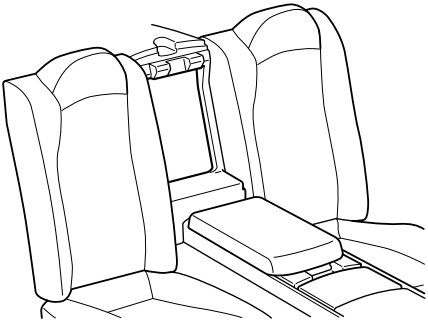

⚠ WARNING

Secure long objects in the trunk so that they cannot be thrown forward in the cabin and avoid sudden breaking or maneuvering:

Sudden braking or maneuvering while long objects are loaded through the removed storage box area and into the trunk is dangerous. Operation of the shift/selector lever could be obstructed resulting in a serious accident.

Accessory Socket

The ignition switch must be in the ACC or ON position.
Only use genuine Mazda accessories or the equivalent requiring no greater than 120 W (DC 12 V, 10 A).
The accessory socket is in the center console.

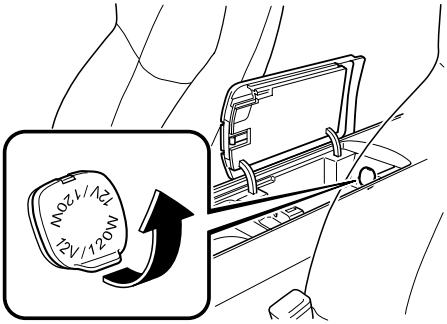

CAUTION

To prevent accessory socket damage or electrical failure, pay attention to the following:

- *Do not use accessories that require more than 120 W (DC 12 V, 10 A).*
- *Do not use accessories that are not genuine Mazda accessories or the equivalent.*
- *Close the cover when the accessory socket is not in use to prevent foreign objects and liquids from getting into the accessory socket.*
- *Correctly insert the plug into the accessory socket.*

NOTE

To prevent discharging of the battery, do not use the socket for long periods with the engine off or idling.

7 In Case of an Emergency

Helpful information on what to do in an emergency.

Parking in an Emergency 7-2
Parking in an Emergency 7-2

Flat Tire 7-3
Spare Tire and Tool Storage 7-3
Instant Mobility System (IMS) Emergency Flat Tire Repair Kit 7-5
Changing the Tire 7-11

Overheating 7-16
Overheating 7-16

Emergency Starting 7-18
Starting a Flooded Engine 7-18
Jump-Starting 7-19
Push-Starting 7-22

Emergency Towing 7-23
Towing Description 7-23
Tiedown Hooks 7-24
Recreational Towing 7-25

Parking in an Emergency

The hazard warning lights should always be used when you stop on or near a roadway in an emergency.

The hazard warning lights warn other drivers that your vehicle is a traffic hazard and that they must take extreme caution when near it.

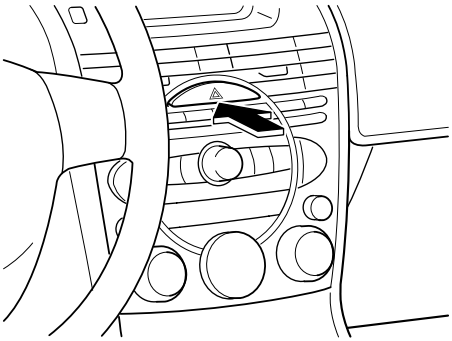

Depress the hazard warning flasher and all the turn signals will flash.

NOTE

- *The turn signals do not work when the hazard warning lights are on.*
- *Check local regulations about the use of hazard warning lights while the vehicle is being towed to verify that it is not in violation of the law.*

Spare Tire and Tool Storage

Tools are stored in the locations illustrated in the diagram.

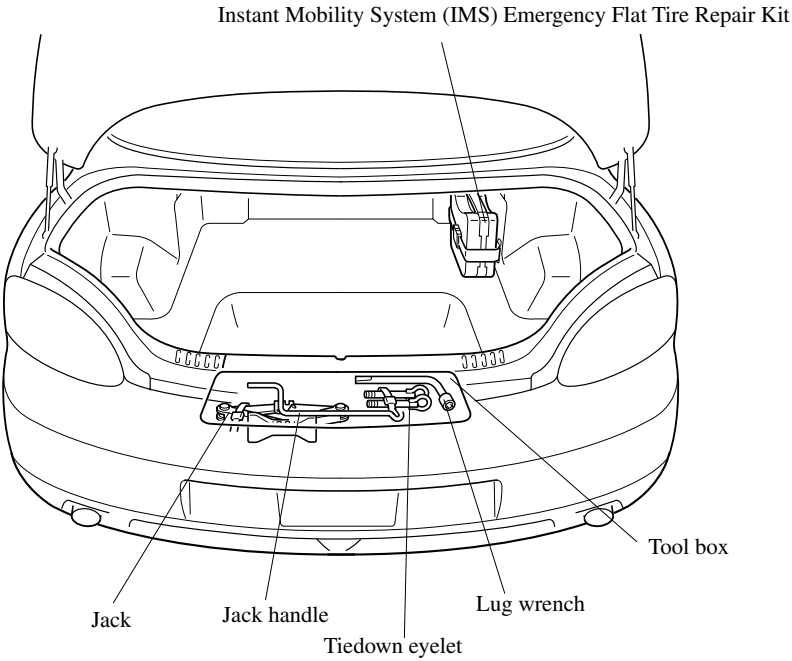

▼Jack

To remove the jack

1. Open the tool box.

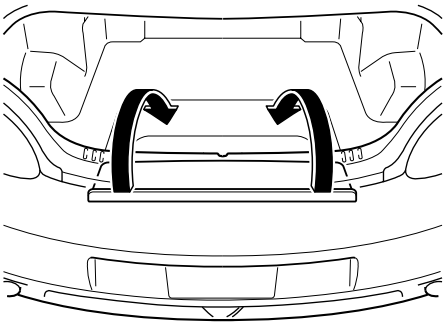

2. Turn the jack screw counterclockwise.

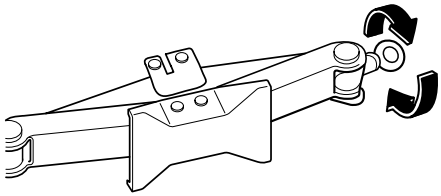

To secure the jack

Perform the removal procedure in reverse.

▼Spare Tire

A temporary spare tire is not equipped with your Mazda. If an emergency tire repair is needed, repair the flat tire with the emergency flat tire repair kit (page 7-5). If you require a temporary spare tire, consult an Authorized Mazda Dealer. When installing a temporary spare tire, follow the manufacturer's instructions for the temporary spare tire.

The temporary spare tire is lighter and smaller than a conventional tire, and is designed only for emergency use and should be used only for VERY short periods. Temporary spare tires should NEVER be used for long drives or extended periods.

⚠ WARNING

Do not install the temporary spare tire in place of a driving wheel:

Driving with the temporary spare tire on one of the driving wheels is dangerous. Especially on ice or snow. Handling will be affected. You could lose control of the vehicle and have an accident. Move a regular tire to a driving wheel and install the temporary spare tire to the non-driving wheel.

CAUTION

- *When using the temporary spare tire, driving stability may decrease compared to when using only the conventional tire.*
  Drive carefully.
- *To avoid damage to the temporary spare tire or to the vehicle, observe the following precautions:*
  - *Do not exceed 80 km/h (50 mph).*
  - *Avoid driving over obstacles. Also, do not drive through an automatic car wash. This tire's diameter is smaller than a conventional tire's, so the ground clearance is reduced about 25 mm (1 in).*
  - *Do not use a tire chain on this tire because it won't fit properly.*
  - *Do not use your temporary spare tire on any other vehicle; it has been designed only for your Mazda.*
  - *Use only one temporary spare tire on your vehicle at the same time.*

(With limited slip differential)
When using the temporary spare tire on the rear axle, replace it with a standard tire as soon as possible. The size difference between the spare and the standard tire will cause the limited slip differential to malfunction.

NOTE
(With Tire Pressure Monitoring System)
A tire pressure sensor is not installed to the temporary spare tire. The warning light will flash continuously while the temporary spare tire is being used (page 5-29).

Instant Mobility System (IMS) Emergency Flat Tire Repair Kit

The IMS emergency flat tire repair kit included with your Mazda is for a temporary repair of a slightly damaged flat tire resulting from running over nails or similar sharp objects on the road surface.

NOTE
Your vehicle is not equipped with a spare tire. In the event of a flat tire, use the emergency flat tire repair kit to repair the tire temporarily. When doing the repair, refer to the instructions included in the emergency flat tire repair kit. After temporarily repairing a tire with the emergency flat tire repair kit, take your vehicle to an Authorized Mazda Dealer to have the tire replaced.

▼About the IMS Emergency Flat Tire Repair Kit

The IMS emergency flat tire repair kit includes the following items.

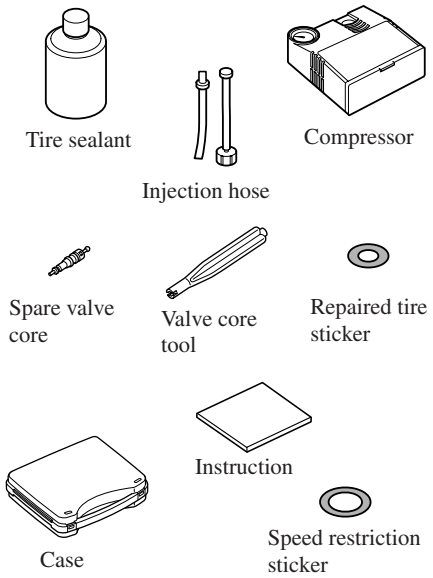

WARNING

Do not allow children to touch the tire sealant:

Ingestion of tire sealant is dangerous. In the event tire sealant is accidentally swallowed, drink large amounts of water immediately and seek medical assistance.

Do not allow children to touch the tire sealant:

Tire sealant that comes into contact with the eyes and skin is dangerous. If tire sealant enters the eyes or contacts the skin, flush immediately with large amounts of water and seek medical assistance.

NOTE

- *The tire sealant cannot be reused. Purchase new tire sealant at an Authorized Mazda Dealer.*
- *The emergency flat tire repair kit cannot be used in the following cases.*
  Consult an Authorized Mazda Dealer.
  - *The period of effective use for the tire sealant has expired. (The period of effectiveness is indicated on the bottle label.)*
  - *The tear or puncture exceeds about 4 mm (0.16 in).*
  - *The damage has occurred to an area of the tire other than the tread.*
  - *The vehicle has been driven with nearly no air remaining in the tire.*
  - *The tire has come off the wheel rim.*
  - *Damage to the wheel rim has occurred.*
  - *The tire has two or more punctures.*

▼Using the IMS Emergency Flat Tire Repair Kit

1. Park on a level surface off the right-of-way and set the parking brake.
2. Put a vehicle with an automatic transmission in Park (P), a manual transmission in Reverse (R) or 1, and turn off the engine.
3. Turn on the hazard warning flasher.

4. Unload passengers and luggage, and remove the emergency flat tire repair kit.

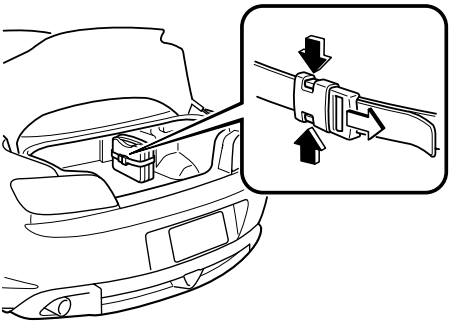

5. Shake the tire sealant well.

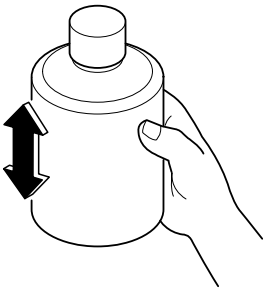

⚠ CAUTION

If the bottle is shaken after the injection hose is screwed on, tire sealant could spray out from the injection hose. Tire sealant contacting clothing or other objects may be impossible to remove. Shake the bottle before screwing on the injection hose.

NOTE

The tire sealant can be used at outside temperatures down to –30°C (–22°F).
In extremely cold temperatures (0°C (32°F) or below), the tire sealant hardens easily and injection of the sealant will be difficult. Warm the sealant inside the vehicle before doing the injection work.

6. Remove the cap from the bottle. Screw on the injection hose with the bottle's inner cap left on to break the inner cap.

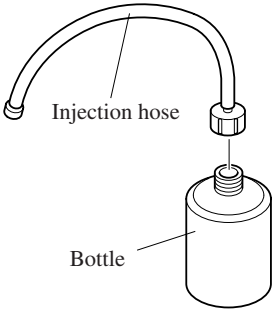

7. Remove the valve cap from the flat tire. Press the back of a valve core tool to the core of the tire valve and bleed all the remaining air.

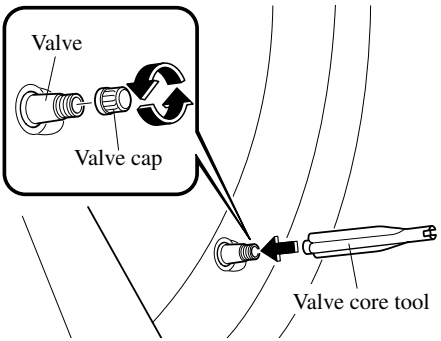

⚠ CAUTION

If there is air remaining in the tire when the valve core is removed, the valve core could fly out. Remove the valve core carefully.

8. Turn the valve core counterclockwise with the valve core tool and remove the valve core.

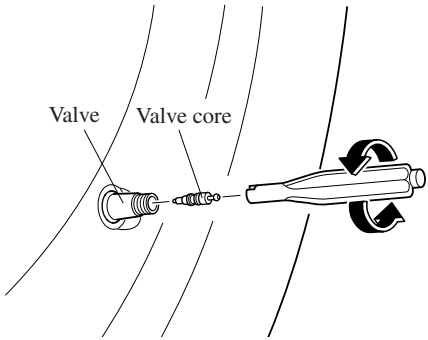

NOTE

Store the valve core in a place where it won't get dirty.

9. Remove the plug from the injection hose and insert the injection hose into the valve.

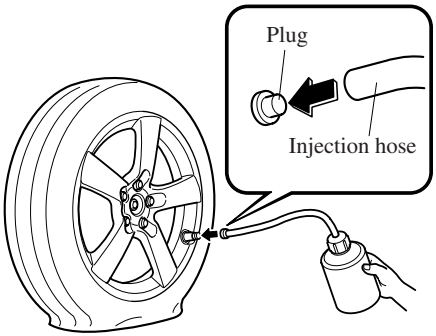

10. Hold the bottom of the bottle upright, squeeze the bottle with your hands, and inject the entire amount of tire sealant into the tire.

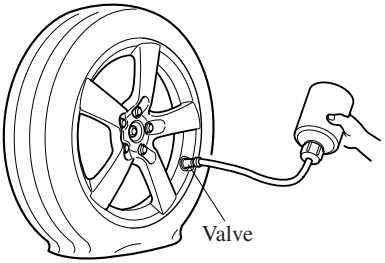

NOTE

The tire sealant cannot be reused. Purchase a new tire sealant kit at an Authorized Mazda Dealer.

11. Pull out the injection hose from the valve. Reinsert the valve core into the valve and turn it clockwise to install it.

12. Attach the sticker that indicates completion of the tire repair on a flat outer surface of the repaired tire.

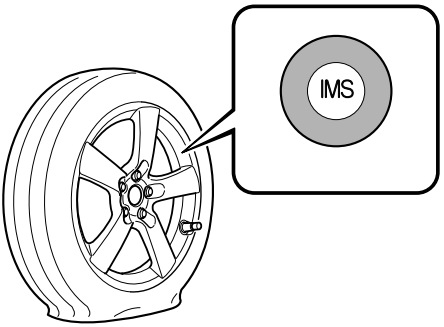

NOTE
Do not throw away the empty tire sealant bottle after use. Return the empty tire sealant bottle to an Authorized Mazda Dealer when replacing the tire. The empty tire sealant bottle will need to be used to extract and dispose of the used sealant from the tire.

13. Attach the vehicle speed restriction sticker in a place where the driver can easily see it.

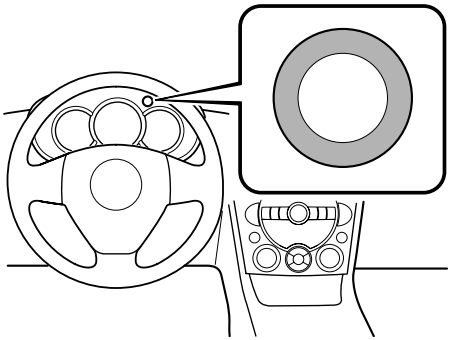

⚠ WARNING

Do not attach the vehicle speed restriction sticker to the instrument panel, as it would obstruct vision of areas such as warning light indicators or the speedometer:

Attaching the vehicle speed restriction sticker to the steering wheel pad is dangerous. The sticker could interfere with air bag inflation and cause serious injury.

14. Install the compressor hose to the tire valve.

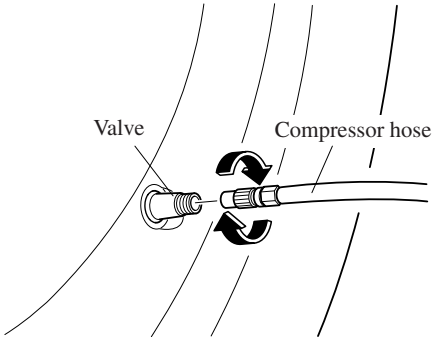

15. Insert the compressor plug into the interior accessory socket and turn the ignition switch to the ACC position (page 6-53).

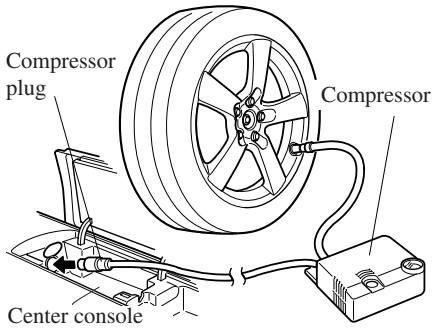

⚠ CAUTION

- *Before pulling out the compressor plug from the electrical socket, make sure the compressor power switch is off.*
- *The compressor turns on and off with the push-button switch.*

16. Turn the compressor switch on and inflate the tire carefully to the correct inflation pressure.

WARNING

Never operate the compressor above 300 kPa (3.1 kgf/cm², 3 bar, 43.5 psi):

Operating the compressor above 300 kPa (3.1 kgf/cm², 3 bar, 43.5 psi) is dangerous. When the inflation pressure rises above 300 kPa (3.1 kgf/cm², 3 bar, 43.5 psi), heated air will be exhausted from the back of the compressor and you could be burned.

CAUTION

If the compressor operates slowly or becomes hot, it indicates overheating. Turn the compressor off immediately and leave it turned off for 30 minutes or longer.

NOTE

- *Check the tire inflation pressure label (rear door on the driver's side) for the correct tire inflation pressure.*
- *Do not use the compressor for longer than 10 minutes because using the compressor for long periods could damage it.*
- *If the tire does not inflate, repair of the tire may not be possible. If the tire does not reach the correct inflation pressure within a 10-minute period, it probably has received more extensive damage. When this happens, the emergency flat tire repair kit cannot be used to repair the tire. Contact an Authorized Mazda Dealer.*
- *If the tire has been over-inflated, loosen the screw cap on the compressor and bleed some of the air out.*

17. When the tire has been inflated to the proper inflation pressure, turn the compressor switch off and remove the compressor hose from the tire valve.
18. Install the tire valve cap.
19. Put the emergency flat tire repair kit in the trunk and continue driving.

CAUTION

- *Drive carefully to an Authorized Mazda Dealer and keep the vehicle speed below 80 km/h (50 mph).*
- *If the vehicle is driven 80 km/h (50 mph) or higher, the vehicle might begin to vibrate.*

NOTE

(With Tire Pressure Monitoring System)

If the tire is not properly inflated, the tire pressure monitoring system warning light will illuminate (page 5-29).

20. After driving the vehicle for 10 minutes or 5 km (3 miles), check the tire pressure with the tire pressure gauge equipped with the compressor. If the tire pressure has fallen below the correct tire pressure, inflate the tire to the correct pressure again following the steps from number 15.

CAUTION

- *If the tire inflation pressure falls below 130 kPa (1.3 kgf/cm² or bar, 18.9 psi), repair cannot be done with the repair kit. Park the vehicle on a level surface off the right-of-way and contact an Authorized Mazda Dealer.*
- *If the tire inflation pressure continues to remain low after repeating steps 14 to 21, park the vehicle on a level surface off the right-of-way and contact an Authorized Mazda Dealer.*

NOTE
When checking the tire inflation pressure with the tire pressure gauge on the compressor unit, make sure the compressor switch is turned off.

21. If the tire inflation pressure remains stable, the tire repair is complete. Drive the vehicle with care to an Authorized Mazda Dealer to have the tire replaced.

⚠ CAUTION

- *A tire that has been temporarily repaired with the tire sealant cannot be reused. Mazda recommends replacing the tire with a new one.*
- *The wheel can be reused after any sealant adhering to it is wiped off and carefully inspected. However, replace the tire valve with a new one.*

▼Inspecting the IMS Emergency Flat Tire Repair Kit

Inspect the emergency tire repair kit at regular intervals.
- Check the tire sealant period of effective use.
- Check the operation of the tire compressor.

NOTE
The tire sealant has a period of effective use. Check the period of effective use indicated on the bottle label and do not use it if it has expired. Have the tire sealant replaced at an Authorized Mazda Dealer before the period of effective use has expired.

Changing the Tire

⚠ WARNING

Be sure to follow the directions for changing a tire, and never get under a vehicle that is supported only by a jack:
Changing a tire is dangerous if not done properly. The vehicle can slip off the jack and seriously injure someone.

Never allow anyone inside a vehicle supported by a jack:
Allowing someone to remain in a vehicle supported by a jack is dangerous. The occupant could cause the vehicle to fall resulting in serious injury.

⚠ CAUTION

(With Tire Pressure Monitoring System)
The wheels equipped on your Mazda are specially designed for installation of the tire pressure sensors. Do not use non-genuine wheels, otherwise it may not be possible to install the tire pressure sensors.

NOTE
- *Make sure the jack is well lubricated before using it.*

(With Tire Pressure Monitoring System)
- *Be sure to register the tire pressure sensor ID signal code whenever tires or wheels are changed (page 5-31).*

1. Park on a level surface off the right-of-way and firmly set the parking brake.
2. Put a vehicle with an automatic transmission in Park (P), a manual transmission in Reverse (R) or 1, and turn off the engine.

3. Turn on the hazard warning flasher.
4. Have everyone get out of the vehicle and away from the vehicle and traffic.
5. Remove the jack, and tool (page 7-3).
6. Block the wheel diagonally opposite the tire to be changed. When blocking a wheel, place a tire block both in front and behind the tire.

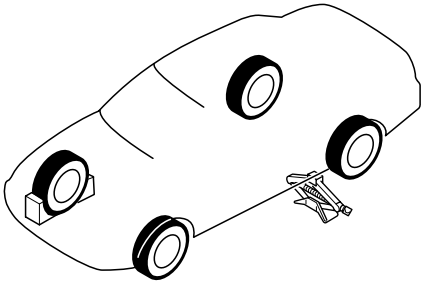

NOTE
When blocking a tire, use rocks or wood blocks of sufficient size if possible to hold the tire in place.

▼Removing the Tire

1. Loosen the lug nuts by turning them counterclockwise one turn each, but don't remove any until the tire has been raised off the ground.

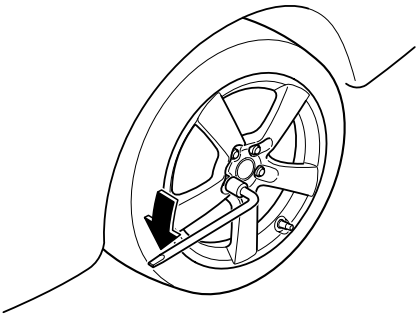

2. Place the jack under the jacking position closest to the tire being changed.

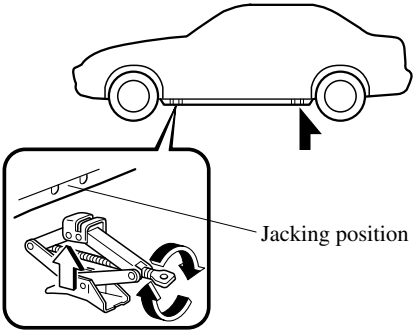

WARNING

Use only the front and rear jacking positions recommended in this manual:

Attempting to jack the vehicle in positions other than those recommended in this manual is dangerous. The vehicle could slip off the jack and seriously injure or even kill someone. Use only the front and rear jacking positions recommended in this manual.

Use only the jack provided with your Mazda:

Using a jack that is not designed for your Mazda is dangerous. The vehicle could slip off the jack and seriously injure someone.

Never place objects under the jack:

Jacking the vehicle with an object under the jack is dangerous. The jack could slip and someone could be seriously injured by the jack or the falling vehicle.

3. Insert the jack handle into the jack.
4. Turn the jack handle clockwise and raise the vehicle high enough so that the tire can be installed. Before removing the lug nuts, make sure your Mazda is firmly in position and that it cannot slip or move.

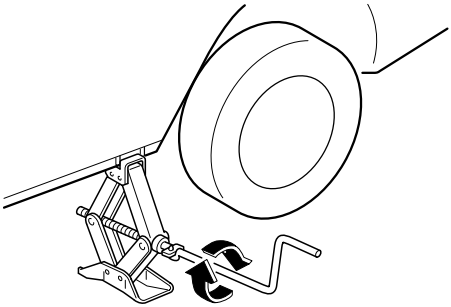

5. Remove the lug nuts by turning them counterclockwise, then remove the wheel.

▼Locking Lug Nuts

If your vehicle has optional antitheft wheel lug nuts, one on each wheel will lock the tires and you must use a special key to unlock them. This key is attached to the lug wrench and is stored with the spare tire. Register them with the lock manufacturer by filling out the card provided in the glove box and mailing it in the accompanying envelope. If you lose this key, consult an Authorized Mazda Dealer or use the lock manufacturer's order form, which is with the registration card.

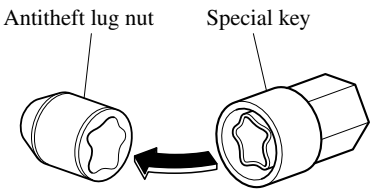

To remove an antitheft lug nut

1. Obtain the key for the antitheft lug nut.
2. Place the key on top of the nut, and be sure to hold the key square to it. If you hold the key at an angle, you may damage both key and nut. Don't use a power impact wrench.
3. Place the lug wrench on top of the key and apply pressure. Turn the wrench counterclockwise.

To install the nut

1. Place the key on top of the nut, and be sure to hold the key square to it. If you hold the key at an angle, you may damage both key and nut. Don't use a power impact wrench.
2. Place the lug wrench on top of the key, apply pressure, and turn it clockwise.

▼Mounting the Tire

1. Remove dirt and grime from the mounting surfaces of the wheel and hub, including the hub bolts, with a cloth.

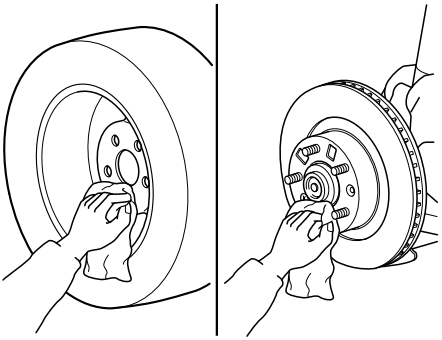

⚠ WARNING

Make sure the mounting surfaces of the wheel, hub and lug nuts are clean before changing or replacing tires:

When changing or replacing a tire, not removing dirt and grime from the mounting surfaces of the wheel, hub and hub bolts is dangerous. The lug nuts could loosen while driving and cause the tire to come off, resulting in an accident.

2. Mount the tire.

3. Install the lug nuts with the beveled edge inward; tighten them by hand.

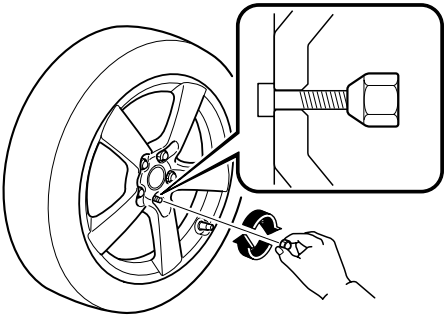

WARNING

Do not apply oil or grease to lug nuts and bolts and do not tighten the lug nuts beyond the recommended tightening torque:

Applying oil or grease to lug nuts and bolts is dangerous. The lug nuts could loosen while driving and cause the tire to come off, resulting in an accident. In addition, lug nuts and bolts could be damaged if tightened more than necessary.

4. Turn the jack handle counterclockwise and lower the vehicle. Use the lug wrench to tighten the nuts in the order shown.

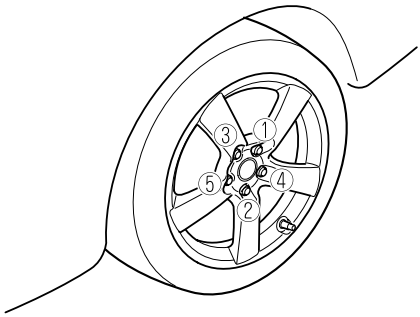

If you're unsure of how tight the nuts should be, have them inspected at an Authorized Mazda Dealer.

Nut tightening torque	
N·m (kgf·m, ft·lbf)	88—118 (9—12, 65—87)

WARNING

Always securely and correctly tighten the lug nuts:

Improperly or loosely tightened lug nuts are dangerous. The wheel could wobble or come off. This could result in loss of vehicle control and cause a serious accident.

Be sure to reinstall the same nuts you removed or replace them with metric nuts of the same configuration:

Because the wheel studs and lug nuts on your Mazda have metric threads, using a non-metric nut is dangerous. On a metric stud, it would not secure the wheel and would damage the stud, which could cause the wheel to slip off and cause an accident.

5. Check the inflation pressure. Refer to the specification charts on page 10-6.

WARNING

Do not drive with any tires that have incorrect air pressure:

Driving on tires with incorrect air pressure is dangerous. Tires with incorrect pressure could affect handling and result in an accident.

NOTE

To prevent the jack and tool from rattling, store them properly.

Overheating

If the temperature gauge indicates overheating, the vehicle loses power, or you hear a loud knocking or pinging noise, the engine is probably too hot.

⚠ WARNING

Turn off the ignition switch and make sure the fan is not running before attempting to work near the cooling fan:

Working near the cooling fan when it is running is dangerous. The fan could continue running indefinitely even if the engine has stopped and the engine compartment temperature is high. You could be hit by the fan and seriously injured.

✓ Do not remove the cooling system cap when the engine and radiator are hot:

When the engine and radiator are hot, scalding coolant and steam may shoot out under pressure and cause serious injury.

Open the hood ONLY after steam is no longer escaping from the engine:

Steam from an overheated engine is dangerous. The escaping steam could seriously burn you.

NOTE

Once the engine coolant exceeds a preset temperature, an electrical cooling fan turns on. It will continue running for about 10 minutes after the ignition switch is turned to off.

If the temperature gauge indicates overheating:

1. Drive safely to the side of the road and park off the right-of-way.
2. Put a vehicle with an automatic transmission in park (P), a manual transmission in neutral.
3. Apply the parking brake.
4. Turn off the air conditioner.
5. Check whether coolant or steam is escaping from under the hood or from the engine compartment.

   If steam is coming from the engine compartment:
   Don't go near the front of the vehicle.
   Stop the engine.
   Wait until the steam dissipates, then open the hood and start the engine.

   If neither coolant nor steam is escaping:
   Open the hood and idle the engine until it cools.

⚠ CAUTION

If the cooling fan does not operate while the engine is running, the engine temperature will increase. Stop the engine and call an Authorized Mazda Dealer.

6. Make sure the cooling fan is operating, then turn off the engine after the temperature has decreased.
7. When cool, check the coolant level.
   If it's low, look for coolant leaks from the radiator and hoses.

If you find a leak or other damage, or if coolant is still leaking:
Stop the engine and call an Authorized Mazda Dealer.

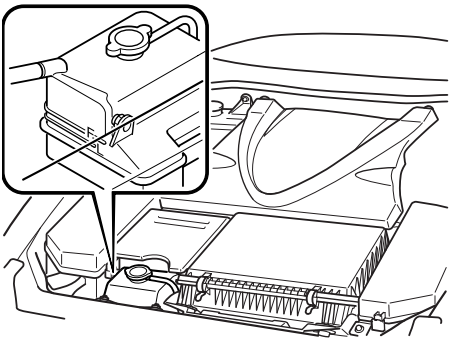

If you find no problems, the engine is cool, and no leaks are obvious:
Carefully add coolant as required (page 8-13).

⚠ CAUTION

If the engine continues to overheat or frequently overheats, have the cooling system inspected. The engine could be seriously damaged unless repairs are made. Consult an Authorized Mazda Dealer.

Starting a Flooded Engine

If the engine does not start the first time, perform the following procedure to start the engine.

1. While the accelerator pedal is fully depressed, turn the ignition switch to the START position and crank the engine for about 7 to 8 seconds.
2. Release the ignition switch and accelerator pedal.
3. Start the engine as normally without depressing the accelerator.

- The fuel injection is cut by fully depressing the accelerator pedal.
- If the engine starts during Step 1, the engine will rev up. Release the ignition switch and accelerator pedal immediately.
- Avoid racing the engine or driving the vehicle right after starting the engine.
- Do not hold the ignition switch in the START position for over 10 seconds. It may damage the starter and drain the battery.
- If the engine still does not start using the above procedure, have your vehicle inspected by an Authorized Mazda Dealer.

Jump-Starting

Jump-starting is dangerous if done incorrectly. So follow the procedure carefully. If you feel unsure about jump-starting, we strongly recommend that you have a competent service technician do the work.

WARNING

Follow These Precautions Carefully:
To ensure safe and correct handling of the battery, read the following precautions carefully before using the battery or inspecting it.

Always wear eye protection when working near the battery:
Working without eye protection is dangerous. Battery fluid contains SULFURIC ACID which could cause blindness if splashed into your eyes. Also, hydrogen gas produced during normal battery operation, could ignite and cause the battery to explode.

Wear eye protection and protective gloves to prevent contact with battery fluid:
Spilled battery fluid is dangerous.
Battery fluid contains SULFURIC ACID which could cause serious injuries if it gets in eyes, skin or clothing. If this happens, immediately flush your eyes with water for 15 minutes or wash your skin thoroughly and get medical attention.

Always keep batteries out of the reach of children:
Allowing children to play near batteries is dangerous. Battery fluid could cause serious injuries if it gets in the eyes or on the skin.

Do not allow the positive (+) terminal to contact any other metal object that could cause sparks:
Flames and sparks near open battery cells are dangerous. Hydrogen gas, produced during normal battery operation, could ignite and cause the battery to explode. An exploding battery can cause serious burns and injuries. When working near a battery, do not allow metal tools to contact the positive (+) or negative (−) terminal of the battery.

Emergency Starting

Keep all flames, including cigarettes, and sparks away from open battery cells:
Flames and sparks near open battery cells are dangerous. Hydrogen gas, produced during normal battery operation, could ignite and cause the battery to explode. An exploding battery can cause serious burns and injuries.

Do not jump-start a frozen battery or one with a low fluid level:
Jump-starting a frozen battery or one with a low fluid level is dangerous. It may rupture or explode, causing serious injury.

Connect the negative cable to a good ground point away from the battery:
Connecting the end of the second jumper cable to the negative (–) terminal of the discharged battery is dangerous.
A spark could cause the gas around the battery to explode and injure someone.

Route the jumper cables away from parts that will be moving:
Connecting a jumper cable near or to moving parts (cooling fans, belts) is dangerous. The cable could get caught when the engine starts and cause serious injury.

CAUTION

Use only a 12 V booster system. You can damage a 12 V starter, ignition system, and other electrical parts beyond repair with a 24 V power supply (two 12 V batteries in series or a 24 V motor generator set).

1. Remove the engine cover.

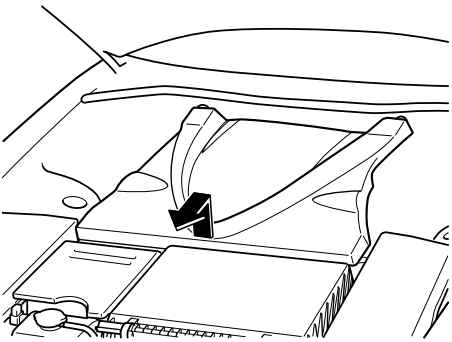

2. Remove the rubber hose from the battery cover.

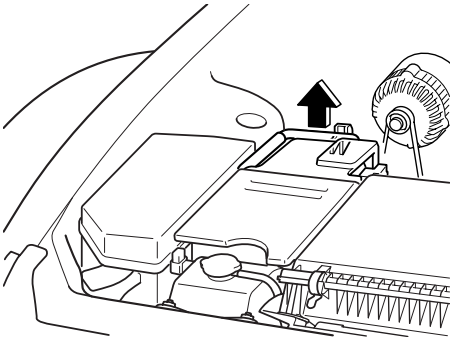

3. Remove the battery cover from its rear side.

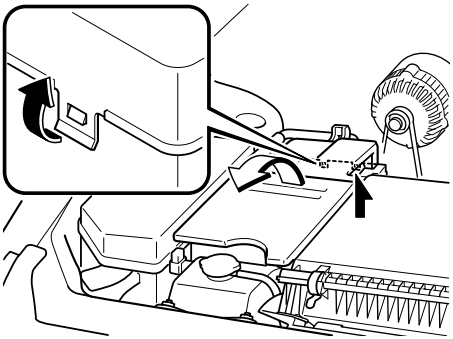

4. Make sure the booster battery is 12 V and that its negative terminal is grounded.
5. If the booster battery is in another vehicle, don't allow the vehicles to touch. Turn off the engine of the vehicle with the booster battery and all unnecessary electrical loads in both vehicles.
6. Connect the jumper cables in the exact sequence as in the illustration.
   - Connect one end of a cable to the positive terminal on the discharged battery (1).
   - Attach the other end to the positive terminal on the booster battery (2).
   - Connect one end of the other cable to the negative terminal of the booster battery (3).
   - Connect the other end to a solid, stationary, exposed metallic point (for example, the tightening bolt) away from the discharged battery (4).

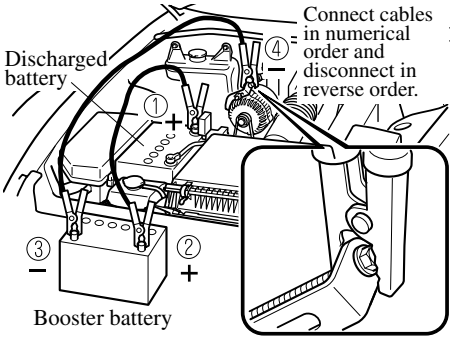

7. Start the engine of the booster vehicle and run it a few minutes. Then start the engine of the other vehicle.
8. When finished, carefully disconnect the cables in the reverse order described in Step 6.

NOTE

Verify that the engine cover is securely installed.

Push-Starting

Do not push-start your Mazda.

⚠ WARNING

Never tow a vehicle to start it:

Towing a vehicle to start it is dangerous. The vehicle being towed could surge forward when its engine starts, causing the two vehicles to collide. The occupants could be injured.

⚠ CAUTION

Do not push-start a vehicle that has a manual transmission. It can damage the emission control system.

NOTE

You can't start a vehicle with an automatic transmission by pushing it.

Towing Description

We recommend that towing be done only by an Authorized Mazda Dealer or a commercial tow-truck service.

Proper lifting and towing are necessary to prevent damage to the vehicle. Government and local laws must be followed.

A towed vehicle usually should have its drive wheels (rear wheels) off the ground. If excessive damage or other conditions prevent this, use wheel dollies.

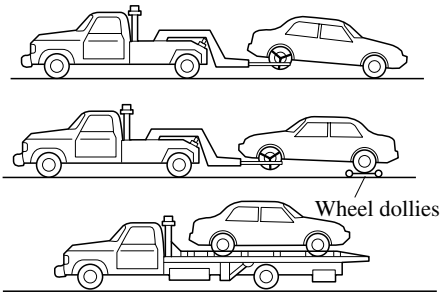

⚠ CAUTION

Don't tow the vehicle pointed forward with driving wheels on the ground. This may cause internal damage to the transmission.

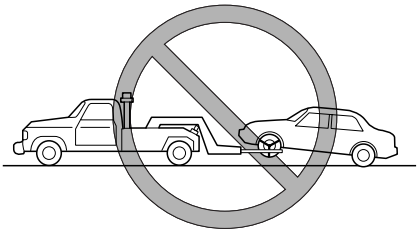

⚠ CAUTION

Don't tow with sling-type equipment. This could damage your vehicle. Use wheel-lift or flatbed equipment.

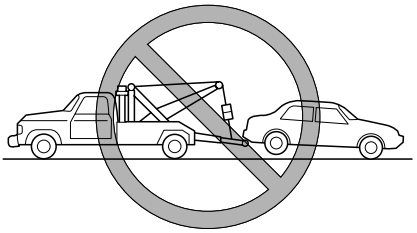

Tiedown Hooks

⚠ CAUTION

Don't use the tiedown hooks under the front and rear for towing. They are designed ONLY for tying down the vehicle when it's being transported. Using them for towing will damage the bumper.

▼Tiedown Hooks

1. Remove the tiedown eyelet and the lug wrench from the trunk (page 7-3).
2. Wrap the lug wrench with a soft cloth to prevent damage to the bumper and open the cap located on the front and rear bumper.

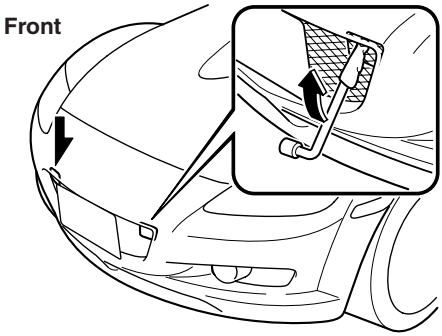

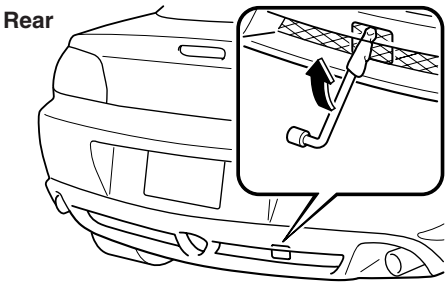

⚠ CAUTION

The cap cannot be completely removed. Do not use excessive force as it may damage the cap or scratch the painted bumper surface.

3. Securely install the tiedown eyelet using the lug wrench.

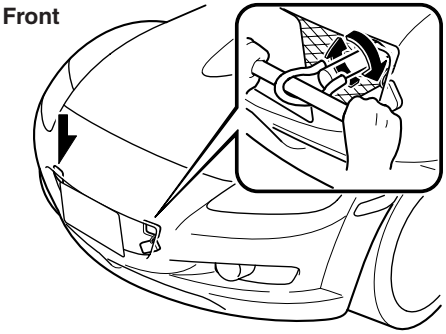

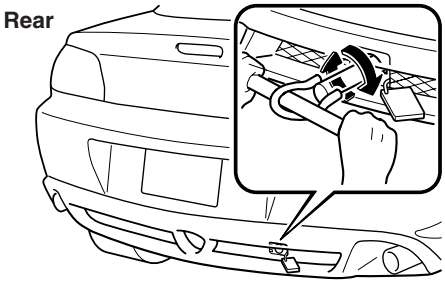

4. Hook the tying rope to the tiedown eyelet.

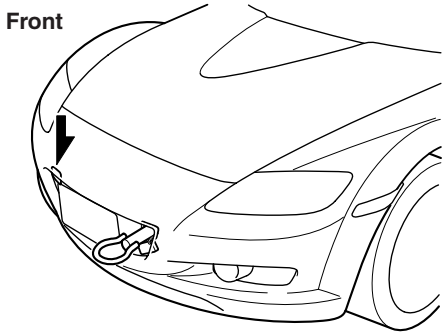

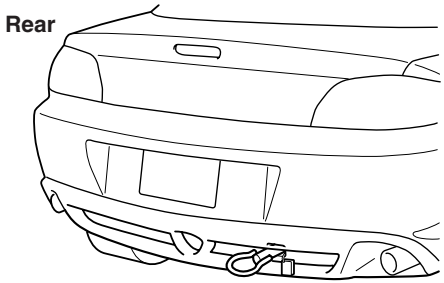

⚠ CAUTION

If the tiedown eyelet is not securely tightened, it may loosen or disengage from the bumper when tying down the vehicle. Make sure that the tiedown eyelet is securely tightened to the bumper.

Recreational Towing

An example of “recreational towing” is towing your vehicle behind a motorhome. The transmission is not designed for towing this vehicle on all 4 wheels.
When doing recreational towing refer to “Towing Description” (page 7-23) and “Tiedown Hooks” (page 7-24) and carefully follow the instructions.

8 Maintenance and Care

How to keep your Mazda in top condition.

Introduction 8-2
Introduction 8-2

Scheduled Maintenance 8-3
Scheduled Maintenance 8-3

Owner Maintenance 8-8
Owner Maintenance Schedule 8-8
Owner Maintenance Precautions 8-9
Engine Compartment Overview 8-10
Engine Oil 8-11
Engine Coolant 8-13
Brake/Clutch Fluid 8-15
Washer Fluid 8-16
Body Lubrication 8-17
Wiper Blades 8-18
Battery 8-20
Tires 8-22
Light Bulbs 8-27
Fuses 8-34

Appearance Care 8-39
How to Minimize Environmental Paint Damage 8-39
Exterior Care 8-41
Interior Care 8-44

Introduction

Be extremely careful and prevent injury to yourself and others or damage to your vehicle when using this manual for inspection and maintenance.

If you're unsure about any procedure it describes, we strongly urge you to have a reliable and qualified service shop perform the work, preferably an Authorized Mazda Dealer.

Factory-trained Mazda technicians and genuine Mazda parts are best for your vehicle. Without this expertise and the parts that have been designed and made especially for your Mazda, inadequate, incomplete, and insufficient servicing may result in problems. This could lead to vehicle damage or an accident and injuries.

For expert advice and quality service, consult an Authorized Mazda Dealer.

The owner should retain evidence that proper maintenance has been performed as prescribed.

Claims against the warranty resulting from lack of maintenance, as opposed to defective materials or authorized Mazda workmanship, will not be honored.

Any auto repair shop using parts equivalent to your Mazda's original equipment may perform maintenance. **But we recommend that it always be done by an Authorized Mazda Dealer using genuine Mazda parts.**

Scheduled Maintenance

Follow Schedule 1 if the vehicle is operated mainly where none of the following conditions apply.

- Repeated short-distance driving
- Driving in dusty conditions
- Driving with extended use of brakes
- Driving in areas where salt or other corrosive materials are being used
- Driving on rough or muddy roads
- Extended periods of idling or low-speed operation
- Driving for long periods in cold temperatures or extremely humid climates

If any do apply, follow Schedule 2 (Canada and Puerto Rico residents follow Schedule 2).

NOTE

After the prescribed period, continue to follow the described maintenance at the recommended intervals.

Scheduled Maintenance

▼Schedule 1

Maintenance Interval		Number of months or kilometers (miles), whichever comes first							
	Months	6	12	18	24	30	36	42	48
	×1000 km	12	24	36	48	60	72	84	96
	×1000 miles	7.5	15	22.5	30	37.5	45	52.5	60
ENGINE									
Engine oil		R	R	R	R	R	R	R	R
Engine oil filter		R	R	R	R	R	R	R	R
Drive belt					I				I
AIR FILTER									
Air filter			C		C	R		C	
IGNITION SYSTEM									
Spark plugs						R			
FUEL SYSTEM									
Fuel filter		Replace every 160,000 km (100,000 miles)							
Fuel lines, hoses and connections*1					I				I
COOLING SYSTEM									
Cooling system					I				I
Engine coolant	FL22 type*2	Replace at first 192,000 km (120,000 miles) or 10 years; after that, every 96,000 km (60,000 miles) or 5 years							
	Others	Replace at first 96,000 km (60,000 miles) or 4 years; after that, every 2 years							
CHASSIS AND BODY									
Brake lines, hoses and connections					I				I
Disc brakes			I		I		I		I
Tire (Rotation)		Rotate every 12,000 km (7,500 miles)							
Steering operation and linkages					I				I
Front and rear suspension, ball joints and wheel bearing axial play					I				I
Manual transmission oil									R
Rear differential oil									R
Driveshaft dust boots					I				I
Exhaust system and heat shields		Inspect every 72,000 km (45,000 miles) or 5 years							
All locks and hinges		L	L	L	L	L	L	L	L
Bolts and nuts on chassis and body					T				T
Flat tire repair kit*3		Inspect every year							

Maintenance Interval	Number of months or kilometers (miles), whichever comes first								
	Months	**6**	**12**	**18**	**24**	**30**	**36**	**42**	**48**
	×1000 km	**12**	**24**	**36**	**48**	**60**	**72**	**84**	**96**
	×1000 miles	**7.5**	**15**	**22.5**	**30**	**37.5**	**45**	**52.5**	**60**
AIR CONDITIONER SYSTEM									
Cabin air filter	Replace every 40,000 km (25,000 miles) or 2 years								

Chart symbols:

I: Inspect: Inspect and clean, repair, adjust, or replace if necessary.
R: Replace
L: Lubricate
C: Clean
T: Tighten

Remarks:

*1 According to state/provincial and federal regulations, failure to perform maintenance on these items will not void your emissions warranties. However, Mazda recommends that all maintenance services be performed at the recommended time or mileage/kilometer period to ensure long-term reliability.
*2 Use FL22 type coolant in vehicles with the inscription “FL22” on the radiator cap itself or the surrounding area. Use FL22 when replacing the coolant.
*3 Check the tire repair fluid expiration date every year when performing the periodic maintenance. Replace the tire repair fluid bottle with new one before the expiration date.

Scheduled Maintenance

▼Schedule 2

Maintenance Interval		Number of months or kilometers (miles), whichever comes first											
		Months	**4**	**8**	**12**	**16**	**20**	**24**	**28**	**32**	**36**	**40**	**44**	**48**
		×1000 km	**8**	**16**	**24**	**32**	**40**	**48**	**56**	**64**	**72**	**80**	**88**	**96**
		×1000 miles	**5**	**10**	**15**	**20**	**25**	**30**	**35**	**40**	**45**	**50**	**55**	**60**
ENGINE														
Engine oil	Puerto Rico	Replace every 5,000 km (3,000 miles) or 3 months											
	Others	R	R	R	R	R	R	R	R	R	R	R	R
Engine oil filter		R	R	R	R	R	R	R	R	R	R	R	R
Drive belt							I						I
AIR FILTER													
Air filter				C			C	R			C		
IGNITION SYSTEM													
Spark plugs								R					
FUEL SYSTEM													
Fuel filter		Replace every 160,000 km (100,000 miles)											
Fuel lines, hoses and connections*1							I						I
COOLING SYSTEM													
Cooling system							I						I
Engine coolant	FL22 type*2	Replace at first 192,000 km (120,000 miles) or 10 years; after that, every 96,000 km (60,000 miles) or 5 years											
	Others	Replace at first 96,000 km (60,000 miles) or 4 years; after that, every 2 years											
Engine coolant level		I	I	I	I	I	I	I	I	I	I	I	I
ELECTRICAL SYSTEM													
Function of all lights		I	I	I	I	I	I	I	I	I	I	I	I

Maintenance Interval	Number of months or kilometers (miles), whichever comes first											
	Months	**4**	**8**	**12**	**16**	**20**	**24**	**28**	**32**	**36**	**40**	**44**	**48**
	×1000 km	**8**	**16**	**24**	**32**	**40**	**48**	**56**	**64**	**72**	**80**	**88**	**96**
	×1000 miles	**5**	**10**	**15**	**20**	**25**	**30**	**35**	**40**	**45**	**50**	**55**	**60**
CHASSIS AND BODY													
Brake lines, hoses and connections							I						I
Brake and clutch fluid level		I	I	I	I	I		I	I	I	I	I	
Brake fluid							R						R
Disc brakes				I			I			I			I
Tire (Rotation)		Rotate every 8,000 km (5,000 miles)											
Tire inflation pressure and tire wear		I	I	I	I	I	I	I	I	I	I	I	I
Steering operation and linkages							I						I
Front and rear suspension, ball joints and wheel bearing axial play							I						I
Manual transmission oil							R						R
Rear differential oil							R						R
Driveshaft dust boots							I						I
Exhaust system and heat shields		Inspect every 72,000 km (45,000 miles) or 5 years											
All locks and hinges		L	L	L	L	L	L	L	L	L	L	L	L
Washer fluid level		I	I	I	I	I	I	I	I	I	I	I	I
Bolts and nuts on chassis and body							T						T
Flat tire repair kit*3		Inspect every year											
AIR CONDITIONER SYSTEM													
Cabin air filter		Replace every 40,000 km (25,000 miles) or 2 years											

Chart symbols:

I: Inspect: Inspect and clean, repair, adjust, or replace if necessary.
R: Replace
L: Lubricate
C: Clean
T: Tighten

Remarks:

*1 According to state/provincial and federal regulations, failure to perform maintenance on these items will not void your emissions warranties. However, Mazda recommends that all maintenance services be performed at the recommended time or mileage/kilometer period to ensure long-term reliability.
*2 Use FL22 type coolant in vehicles with the inscription “FL22” on the radiator cap itself or the surrounding area. Use FL22 when replacing the coolant.
*3 Check the tire repair fluid expiration date every year when performing the periodic maintenance. Replace the tire repair fluid bottle with new one before the expiration date.

Owner Maintenance Schedule

The owner or a qualified service technician should make these vehicle inspections at the indicated intervals to ensure safe and dependable operation.

Bring any problem to the attention of an Authorized Mazda Dealer or qualified service technician as soon as possible.

▼When Refueling

- Brake and clutch fluid level (page 8-15)
- Engine coolant level (page 8-13)
- Engine oil level (page 8-12)
- Washer fluid level (page 8-16)

▼At Least Monthly

Tire inflation pressures (page 8-22)

▼At Least Twice a Year (For Example, Every Spring and Fall)

You can do the following scheduled maintenance items if you have some mechanical ability and a few basic tools and if you closely follow the directions in this manual.
- Engine coolant (page 8-13)
- Engine oil (page 8-11)

Owner Maintenance Precautions

Improper or incomplete service may result in problems. This section gives instructions only for items that are easy to perform.

As explained in the Introduction (page 8-2), several procedures can be done only by a qualified service technician with special tools.

Improper owner maintenance during the warranty period may affect warranty coverage. For details, read the separate Mazda Warranty statement provided with the vehicle. If you're unsure about any servicing or maintenance procedure, have it done by an Authorized Mazda Dealer.

There are strict environmental laws regarding the disposal of waste oil and fluids. Please dispose of your waste properly and with due regard to the environment.

We recommend that you entrust the oil and fluid changes of your vehicle to an Authorized Mazda Dealer.

⚠ WARNING

Do not perform maintenance work if you lack sufficient knowledge and experience or the proper tools and equipment to do the work. Have maintenance work done by a qualified technician:

Performing maintenance work on a vehicle is dangerous if not done properly. You can be seriously injured while performing some maintenance procedures.

If you must run the engine while working under the hood, make certain that you remove all jewelry (especially rings, bracelets, watches, and necklaces) and all neckties, scarves, and similar loose clothing before getting near the engine or cooling fan which may turn on unexpectedly:

Working under the hood with the engine running is dangerous. It becomes even more dangerous when you wear jewelry or loose clothing.
Either can become entangled in moving parts and result in injury.

Turn off the ignition switch and make sure the fan is not running before attempting to work near the cooling fan:

Working near the cooling fan when it is running is dangerous. The fan could continue running indefinitely even if the engine has stopped and the engine compartment temperature is high. You could be hit by the fan and seriously injured.

NOTE

Once the engine coolant exceeds a preset temperature, an electrical cooling fan turns on. It will continue running for about 10 minutes after the ignition switch is turned to off.

Engine Compartment Overview

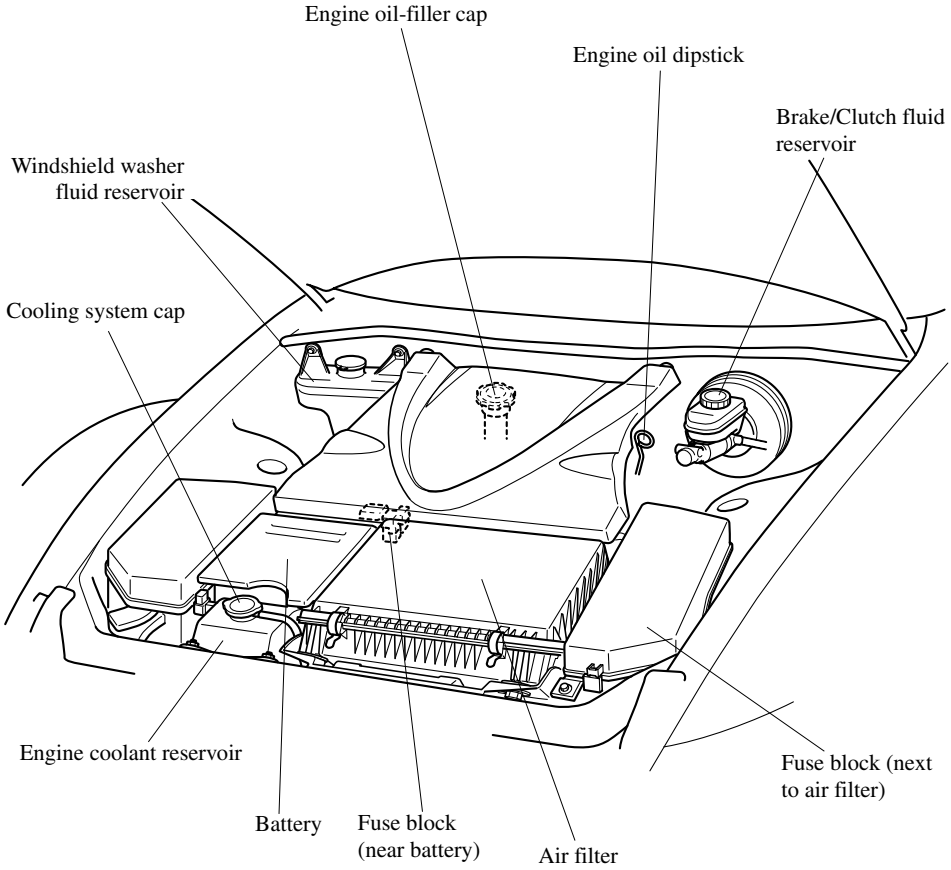

Engine Oil

⚠ CAUTION

Do not use either synthetic or semi-synthetic motor oil. Otherwise engine starting performance could worsen.

NOTE

- *Changing the engine oil should be done by an Authorized Mazda Dealer.*
- *The Mazda RX-8 requires regular checking of the engine oil level. The compact, high performance RENESIS rotary engine in your vehicle consumes a small amount of engine oil due to its structural design. An oil pump optimizes the amount of oil injected to lubricate the rotor seals in the combustion cycle. Although your vehicle is equipped with an engine oil level warning light and an engine oil pressure gauge, it is best to keep the engine oil level in the range between full and low by checking the oil dipstick regularly. Mazda recommends checking the oil level at every second fuel filling. The oil consumption of the engine depends on engine speed and engine load. Under extreme driving conditions, oil consumption can be higher.*

▼Recommended Oil

Use SAE 5W-20 engine oil.
Oil container labels provide important information.
A chief contribution this type of oil makes to fuel economy is reducing the amount of fuel necessary to overcome engine friction.

U.S.A. and CANADA

(ILSAC)

Only use oils “Certified For Gasoline Engines” by the American Petroleum Institute (API). An oil with this trademark symbol conforms to the current engine and emission system protection standards and fuel economy requirements of the International Lubricant Standardization and Approval Committee (ILSAC), comprised of U.S. and Japanese automobile manufacturers.

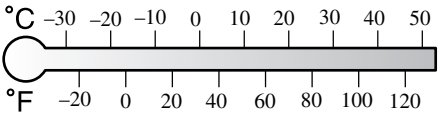

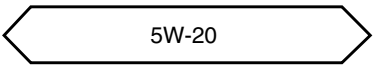

Except U.S.A. and CANADA

(ILSAC)

The quality designation SL,SM, or ILSAC must be on the label.

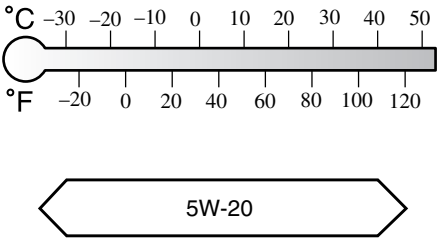

▼Inspecting Engine Oil Level

1. Be sure the vehicle is on a level surface.
2. Warm up the engine to normal operating temperature.
3. Turn it off and wait at least 5 minutes for the oil to return to the oil pan.
4. Remove the engine cover.

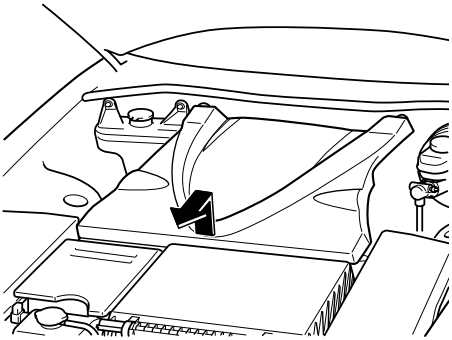

5. Pull out the dipstick, wipe it clean, and reinsert it fully.

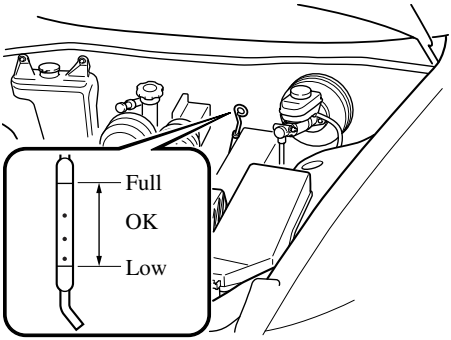

6. Pull it out again and examine the level. It's OK between L and F.
   But if it's near or below L, add enough oil to bring the level to F.

⚠ CAUTION

Don't add engine oil over F. This may cause engine damage.

The distance between L and F on the dipstick represents the following:

Oil capacity	
L (US qt, Imp qt)	1.7 (1.8, 1.5)

NOTE

- *Each mark from the F mark equates to about 0.5 L (US 0.5 qt, Imp 0.4 qt). There are 3 marks between L and F.*
- *Verify that the engine cover is securely installed.*

Engine Coolant

▼Inspecting Coolant Level

⚠ WARNING

Do not use a match or live flame in the engine compartment. DO NOT ADD COOLANT WHEN THE ENGINE IS HOT:

A hot engine is dangerous. If the engine has been running, parts of the engine compartment can become very hot. You could be burned. Carefully inspect the engine coolant in the coolant reservoir, but do not open it.

Turn off the ignition switch and make sure the fan is not running before attempting to work near the cooling fan:

Working near the cooling fan when it is running is dangerous. The fan could continue running indefinitely even if the engine has stopped and the engine compartment temperature is high. You could be hit by the fan and seriously injured.

Do not remove the cooling system cap when the engine and radiator are hot:

When the engine and radiator are hot, scalding coolant and steam may shoot out under pressure and cause serious injury.

NOTE
Once the engine coolant exceeds a preset temperature, an electrical cooling fan turns on. It will continue running for about 10 minutes after the ignition switch is turned to off.

NOTE
Changing the coolant should be done by an Authorized Mazda Dealer.

Inspect the antifreeze protection and coolant level in the coolant reservoir at least once a year—at the beginning of the winter season—and before traveling where temperatures may drop below freezing.

Inspect the condition and connections of all cooling system and heater hoses. Replace any that are swollen or deteriorated.

The coolant should be at full in the radiator and between the F and L marks on the coolant reservoir when the engine is cool.

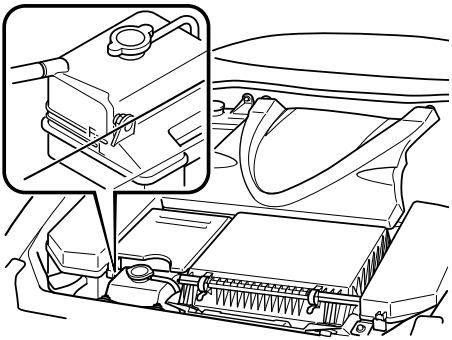

If it's at or near L, add enough coolant to the coolant reservoir to provide freezing and corrosion protection and to bring the level to F.

⚠ CAUTION

- *Radiator coolant will damage paint.*
  Rinse it off quickly if spilled.
- *Use only soft (demineralized) water in the coolant mixture.*
  Water that contains minerals will cut down on the coolant's effectiveness.
- *Don't add only water. Always add a proper coolant mixture.*
- *The engine has aluminum parts and must be protected by an ethylene-glycol-based coolant to prevent corrosion and freezing.*
- *DO NOT USE coolants Containing Alcohol, methanol, Borate or Silicate.*
  These coolants could damage the cooling system.
- *DO NOT MIX alcohol or methanol with the coolant. This could damage the cooling system.*
- *Don't use a solution that contains more than 60% antifreeze.*
  This would reduce effectiveness.

NOTE
If the "FL22" mark is shown on or near the cooling system cap, use FL22 type engine coolant. If engine coolant other than FL22 type is used, the engine coolant must be replaced earlier than the specified replacement interval indicated in the scheduled maintenance (page 8-3).

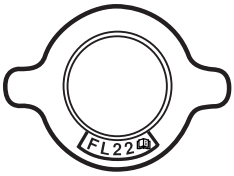

If the coolant reservoir is empty or new coolant is required frequently, consult an Authorized Mazda Dealer.

Brake/Clutch Fluid

▼Inspecting Brake/Clutch Fluid Level

The brakes and clutch draw fluid from the same reservoir.
Inspect the fluid level in the reservoir regularly. It should be kept at MAX.
The level normally drops with accumulated distance, a condition associated with wear of brake and clutch linings. If it is excessively low, have the brake/clutch system inspected by an Authorized Mazda Dealer.

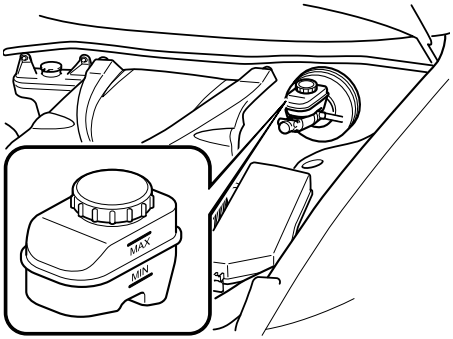

▼Adding Brake/Clutch Fluid

⚠ WARNING

Be careful not to spill brake fluid on yourself or on the engine:

Spilled brake fluid is dangerous. If it gets in your eyes, they could be seriously injured. If this happens, immediately flush your eyes with water and get medical attention. Brake fluid spilled on a hot engine could cause a fire.

If the brake/clutch fluid level is low, have the brakes and clutch inspected:

Low brake/clutch fluid levels are dangerous. Low levels could signal brake lining wear or a brake system leak. Your brakes could fail and cause an accident.

If the fluid level is low, add fluid until it reaches MAX.
Before adding fluid, thoroughly clean the area around the cap.

⚠ CAUTION

- *Brake and clutch fluid will damage painted surfaces. If brake or clutch fluid does get on a painted surface, wash it off with water immediately.*
- *Using nonspecified brake and clutch fluids (page 10-4) will damage the systems. Mixing different fluids will also damage them.*
  If the brake/clutch system frequently requires new fluid, consult an Authorized Mazda Dealer.

Washer Fluid

▼Inspecting Washer Fluid Level

⚠ WARNING

Use only windshield washer fluid or plain water in the reservoir:

Using radiator antifreeze as washer fluid is dangerous. If sprayed on the windshield, it will dirty the windshield, affect your visibility, and could result in an accident.

Using Washer Fluid Without Anti-freeze Protection in Cold Weather:

Operating your vehicle in temperatures below 4 degrees C (40 degrees F) using washer fluid without anti-freeze protection is dangerous as it could cause impaired windshield vision and result in an accident. In cold weather, always use washer fluid with anti-freeze protection.

NOTE

State or local regulations may restrict the use of volatile organic compounds (VOCs), which are commonly used as anti-freeze agents in washer fluid. A washer fluid with limited VOC content should be used only if it provides adequate freeze resistance for all regions and climates in which the vehicle will be operated.

Inspect fluid level in the washer fluid reservoir; add fluid if necessary.

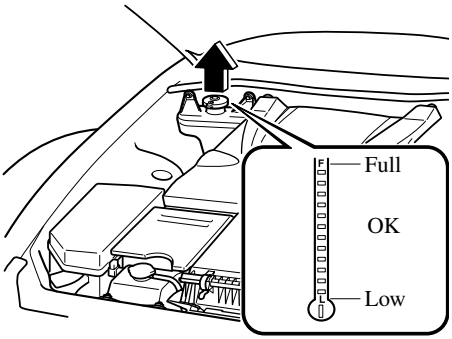

Use plain water if washer fluid is unavailable.
But use only washer fluid in cold weather to prevent it from freezing.

Body Lubrication

All moving points of the body, such as door and hood hinges and locks, should be lubricated each time the engine oil is changed. Use a nonfreezing lubricant on locks during cold weather.

Make sure the hood's secondary latch keeps the hood from opening when the primary latch is released.

Wiper Blades

⚠ CAUTION

- *Hot waxes applied by automatic car washers have been known to affect the wiper's ability to clean windows.*
- *To prevent damage to the wiper blades, don't use gasoline, kerosene, paint thinner, or other solvents on or near them.*

Contamination of either the windshield or the blades with foreign matter can reduce wiper effectiveness. Common sources are insects, tree sap, and hot wax treatments used by some commercial car washes.

If the blades are not wiping properly, clean the window and blades with a good cleaner or mild detergent; then rinse thoroughly with clean water. Repeat if necessary.

▼Replacing Windshield Wiper Blades

When the wipers no longer clean well, the blades are probably worn or cracked. Replace them.

⚠ CAUTION

To prevent damage to the wiper arms and other components, don't try to sweep the wiper arm by hand.

NOTE

To prevent damage to the wiper arm blades when raising both the driver and passenger side wiper arms, raise the driver side wiper arm first. Conversely, when setting down the wiper arms, set the passenger side wiper arm down first.

1. Raise the wiper arm and turn the blade assembly to expose the plastic locking clip.
   Compress the clip and slide the assembly downward; then lift it off the arm.

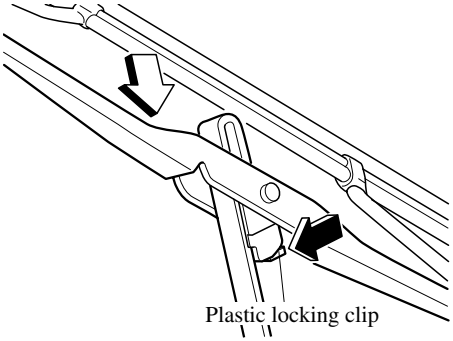

⚠ CAUTION

To prevent damage to the windshield let the wiper arm down easily, don't let it slap down on the windshield.

2. Hold the end of the rubber and pull until the tabs are free of the metal support.

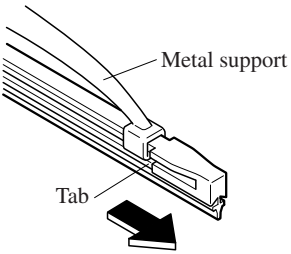

3. Remove the metal stiffeners from each blade rubber and install them in the new blade.

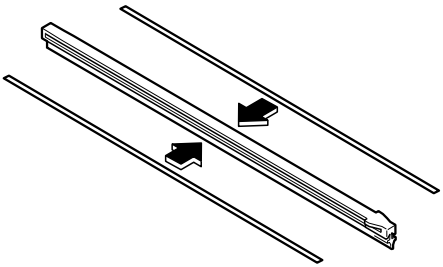

CAUTION

- *Don't bend or discard the stiffeners. You need to use them again.*
- *If the metal stiffeners are switched, the blade's wiping efficiency could be reduced.*
  So don't use the driver's side metal stiffeners on the passenger's side, or vice versa.
- *Be sure to reinstall the metal stiffeners in the new blade rubber so that the curve is the same as it was in the old blade rubber.*

4. Carefully insert the new blade rubber. Then install the blade assembly in the reverse order of removal.

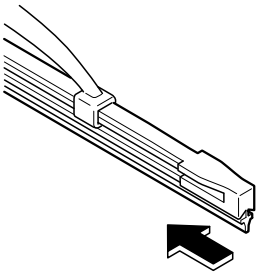

NOTE

Install the blade so that the tabs are toward the bottom of the wiper arm.

Battery

WARNING

Wash hands after handling the battery and related accessories:

Battery posts, terminals and related accessories contain lead and lead compounds, chemicals known to the State of California to cause cancer and reproductive harm.

Read the following precautions carefully before using the battery or inspecting to ensure safe and correct handling:

Always wear eye protection when working near the battery:

Working without eye protection is dangerous. Battery fluid contains SULFURIC ACID which could cause blindness if splashed into your eyes. Also, hydrogen gas produced during normal battery operation, could ignite and cause the battery to explode.

Wear eye protection and protective gloves to prevent contact with battery fluid:

Spilled battery fluid is dangerous.
Battery fluid contains SULFURIC ACID which could cause serious injuries if it gets in eyes, or on the skin or clothing. If this happens, immediately flush your eyes with water for 15 minutes or wash your skin thoroughly and get medical attention.

Always keep batteries out of the reach of children:

Allowing children to play near batteries is dangerous. Battery fluid could cause serious injuries if it gets in the eyes or on the skin.

Keep flames and sparks away from open battery cells and do not allow metal tools to contact the positive (+) or negative (–) terminal of the battery when working near a battery. Do not allow the positive (+) terminal to contact the vehicle body:

Flames and sparks near open battery cells are dangerous. Hydrogen gas, produced during normal battery operation, could ignite and cause the battery to explode. An exploding battery can cause serious burns and injuries. Keep all flames including cigarettes and sparks away from open battery cells.

Keep all flames, including cigarettes, and sparks away from open battery cells: *Flames and sparks near open battery cells are dangerous. Hydrogen gas, produced during normal battery operation, could ignite and cause the battery to explode. An exploding battery can cause serious burns and injuries.*

NOTE

- *Remove the engine and battery covers before performing battery maintenance.*

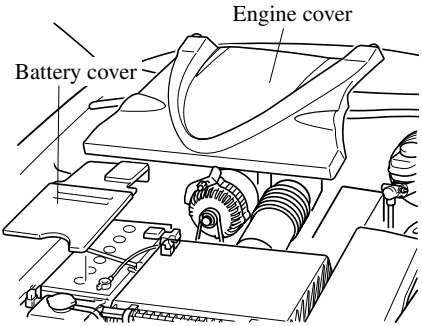

- *If the cover has been removed, install it in the reverse order of removal.*

▼Battery Maintenance

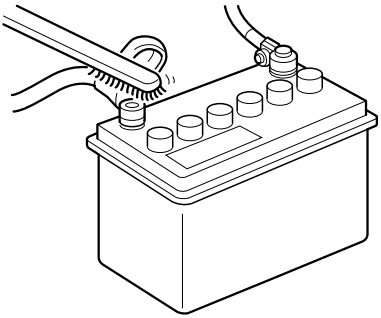

To get the best service from a battery:

- Keep it securely mounted.
- Keep the top clean and dry.
- Keep terminals and connections clean, tight, and coated with petroleum jelly or terminal grease.
- Rinse off spilled electrolyte immediately with a solution of water and baking soda.
- If the vehicle will not be used for an extended time, disconnect the battery cables.

Tires

For reasons of proper performance, safety, and better fuel economy, always maintain recommended tire inflation pressures and stay within the recommended load limits and weight distribution.

⚠ WARNING

Using Different Tire Types:

Driving your vehicle with different types of tires is dangerous. It could cause poor handling and poor braking; leading to loss of control. Use all radial, all bias-belted, or all bias-type tires.

Using Wrong-Sized Tires:

Using any other tire size than what is specified for your Mazda (page 10-6) is dangerous. It could seriously affect ride, handling, ground clearance, tire clearance, and speedometer calibration. This could cause you to have an accident. Use only tires that are the correct size specified for your Mazda.

▼Tire Inflation Pressure

⚠ WARNING

Always inflate the tires to the correct pressure:

Overinflation or underinflation of tires is dangerous. Adverse handling or unexpected tire failure could result in a serious accident.
Refer to specification charts on page 10-6.

The Tire Pressure Monitoring System* does not alleviate the need to check the tire condition every day, including whether the tires all look inflated properly. Inspect all tire pressure monthly (including the spare*) when the tires are cold. Maintain recommended pressures for the best ride, handling, and minimum tire wear.
When checking the tire pressures, use of a digital tire pressure gauge is recommended.

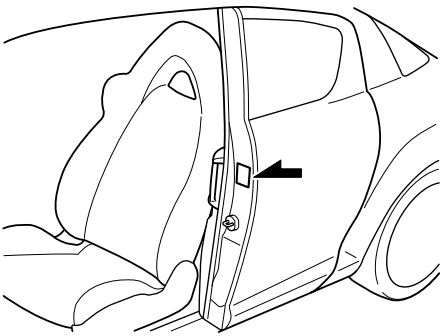

Refer to the specification charts (page 10-6).

NOTE

- *Always check tire pressure when tires are cold.*
- *Warm tires normally exceed recommended pressures. Don't release air from warm tires to adjust the pressure.*
- *Underinflation can cause reduced fuel economy, uneven and accelerated tire wear, and poor sealing of the tire bead, which will deform the wheel and cause separation of tire from rim.*
- *Overinflation can produce a harsh ride, uneven and accelerated tire wear, and a greater possibility of damage from road hazards.*
  Keep your tire pressure at the correct levels. If one frequently needs inflating, have it inspected.

▼Tire Rotation

To equalize tread wear, rotate the tires if irregular wear develops. According to the scheduled maintenance charts.Refer to Scheduled Maintenance on page 8-3. During rotation, inspect them for correct balance.

NOTE

Because your vehicle is not equipped with a spare tire, you cannot do a tire rotation safely with the jack that comes with your vehicle. Have an Authorized Mazda Dealer perform tire rotation.

*Some models.

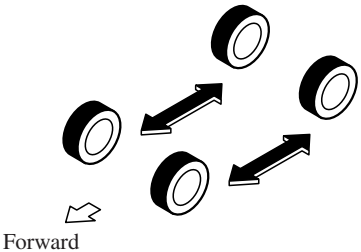

Also, inspect them for uneven wear and damage. Abnormal wear is usually caused by one or a combination of the following:

- Incorrect tire pressure
- Improper wheel alignment
- Out-of-balance wheel
- Severe braking

After rotation, inflate all tire pressures to specification (page 10-6) and inspect the lug nuts for tightness.

⚠ CAUTION

Rotate unidirectional tires and radial tires that have an asymmetrical tread pattern or studs only from front to rear, not from side to side. Tire performance will be weakened if rotated from side to side.

⚠ CAUTION

Limited-Slip Differential system; don't use the following:
- *Tires not of the designated size*
- *Tires of different sizes or types at the same time*
- *Tires not sufficiently inflated*

If these instructions aren't followed, the rotation of the left and right wheels will be different and will thus apply a constant load on the limited-slip differential.
This will cause a malfunction.

▼Replacing a Tire

⚠ WARNING

Always use tires that are in good condition:
Driving with worn tires is dangerous. Reduced braking, steering, and traction could result in an accident.

⚠ CAUTION

(With Tire Pressure Monitoring System)
When replacing/repairing the tires or wheels or both, have the work done by an Authorized Mazda Dealer, or the tire pressure sensors may be damaged.

NOTE
(With Tire Pressure Monitoring System)
- *When tires with steel wire reinforcement in the sidewalls are used, the system may not function correctly even with a genuine wheel.*
  Refer to System Error Activation on page 5-31.
- *Be sure to install the tire pressure sensors whenever tires or wheels are replaced.*
  Refer to Tires and Wheels on page 5-31.

If a tire wears evenly, a wear indicator will appear as a solid band across the tread.
Replace the tire when this happens.

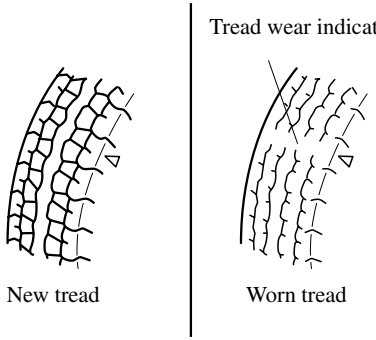

You should replace it before the band is across the entire tread.

NOTE
Tires degrade over time, even when they are not being used on the road. It is recommended that tires generally be replaced when they are 6 years or older. Heat caused by hot climates or frequent high loading conditions can accelerate the aging process. You should replace the spare tire when you replace the other road tires due to the aging of the spare tire. Regarding the manufacturing week and year is indicated with 4 digit.
Refer to The tire labeling on page 9-18.

▼Temporary Spare Tire

Your Mazda is not equipped with a spare tire. If you require a spare tire, consult an Authorized Mazda Dealer.

Inspect the temporary spare tire at least monthly to make sure it's properly inflated and stored.

NOTE
The temporary spare tire condition gradually deteriorates even if it has not been used.

The temporary spare tire is easier to handle because of its construction which is lighter and smaller than a conventional tire. This tire should be used only for an emergency and only for a short distance.

Use the temporary spare tire only until the conventional tire is repaired, which should be as soon as possible.

Maintain its pressure at 420 kPa (4.2 kgf/cm^2 or bar, 60 psi).

⚠ CAUTION

- *Do not use your temporary spare tire rim with a snow tire or a conventional tire. Neither will properly fit and could damage both tire and rim.*
- *The temporary spare tire has a tread life of less than 5,000 km (3,000 miles). The tread life may be shorter depending on driving conditions.*
- *The temporary spare tire is for limited use, however, if the tread wear solid-band indicator appears, replace the tire with the same type of temporary spare (page 8-24).*

NOTE
Tires degrade over time, even when they are not being used on the road. It is recommended that tires generally be replaced when they are 6 years or older. Heat caused by hot climates or frequent high loading conditions can accelerate the aging process. You should replace the spare tire when you replace the other road tires due to the aging of the spare tire. Regarding the manufacturing week and year is indicated with 4 digit.
Refer to The tire labeling on page 9-18.

▼Replacing a Wheel

⚠ WARNING

Always use wheels of the correct size on your vehicle:
Using a wrong-sized wheel is dangerous. Braking and handling could be affected, leading to loss of control and an accident.

⚠ CAUTION

- *A wrong-sized wheel may adversely affect:*
  - *Tire fit*
  - *Wheel and bearing life*
  - *Ground clearance*
  - *Snow-chain clearance*
  - *Speedometer calibration*
  - *Headlight aim*
  - *Bumper height*
  - *Tire Pressure Monitoring System*
  - *Limited-Slip Differential System*
- ***(With Tire Pressure Monitoring System)***
  - *When replacing/repairing the tires or wheels or both, have the work done by an Authorized Mazda Dealer, or the tire pressure sensors may be damaged.*
  - *The wheels equipped on your Mazda are specially designed for installation of the tire pressure sensors. Do not use non-genuine wheels, otherwise it may not be possible to install the tire pressure sensors.*

NOTE
Be sure to install the tire pressure sensors whenever tires or wheels are replaced. *Refer to Tires and Wheels on page 5-31.*

When replacing a wheel, make sure the new one is the same as the original factory wheel in diameter, rim width, and offset.

Proper tire balancing provides the best riding comfort and helps reduce tread wear. Out-of-balance tires can cause vibration and uneven wear, such as cupping and flat spots.

Light Bulbs

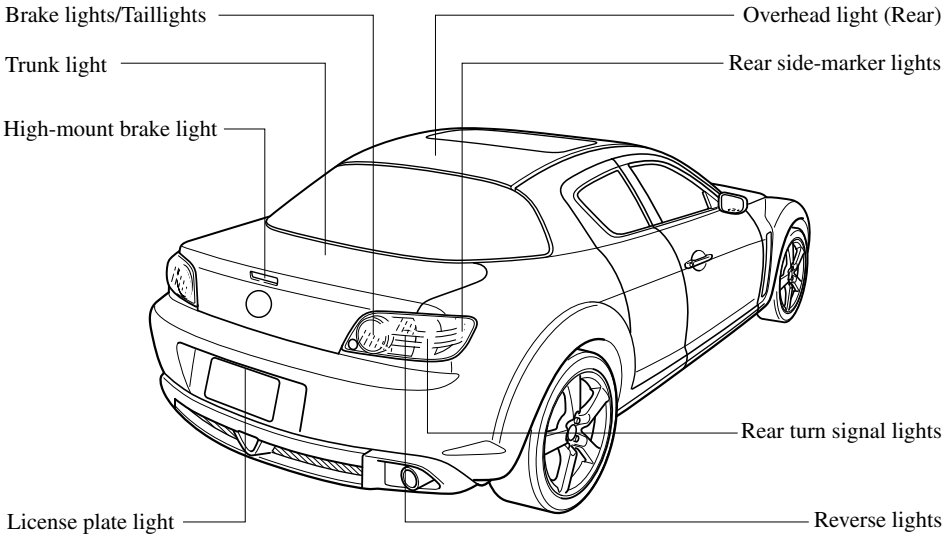

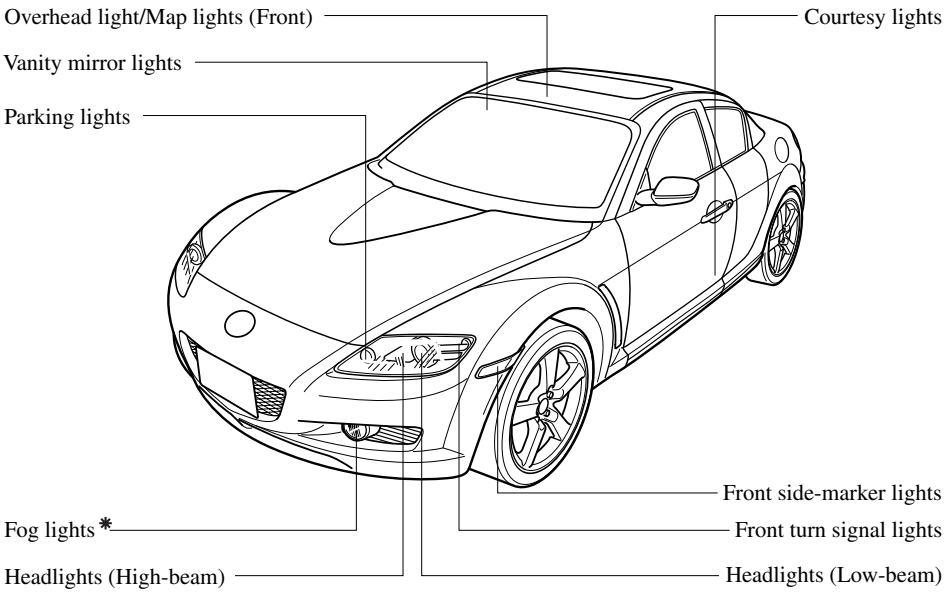

*Some models.

WARNING

Do not replace the xenon fusion bulbs yourself:

Replacing the xenon fusion bulbs yourself is dangerous. Because the xenon fusion bulbs require high voltage, you could receive an electric shock if the bulbs are handled incorrectly. Consult an Authorized Mazda Dealer when the replacement is necessary.

Never touch the glass portion of a halogen bulb with your bare hands and always wear eye protection when handling or working around the bulbs:

When a halogen bulb breaks, it is dangerous. These bulbs contain pressurized gas. If one is broken, it will explode and serious injuries could be caused by the flying glass. If the glass portion is touched with bare hands, body oil could cause the bulb to overheat and explode when lit.

Always keep halogen bulbs out of the reach of children:

Playing with a halogen bulb is dangerous. Serious injuries could be caused by dropping a halogen bulb or breaking it some other way.

▼Replacing a Headlight Bulb

1. Make sure the ignition switch is turned off and the headlight switch is off.
2. Lift the hood and find the high and low beam bulbs in the rear of the headlight unit.
   The outboard bulb is the LOW beam, and the inboard one is the HIGH beam.
   Refer to Light Bulbs on page 8-27.
3. If you are changing the right headlight bulb, start the engine, turn the steering wheel all the way to the right, and turn off engine. If you are changing the left headlight bulb, turn the steering wheel to the left.
4. Turn the center section of the plastic retainer counterclockwise and remove the retainers and partially peel back the mudguard.

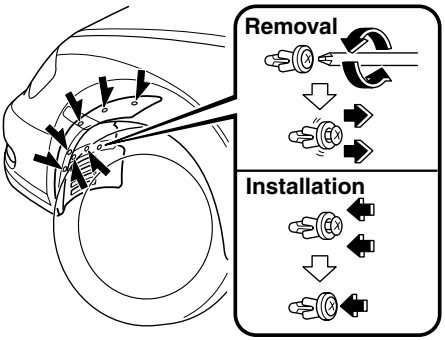

High-beam bulb

1. Turn the socket and bulb assembly counterclockwise and remove it. Carefully remove the headlight bulb from its socket in the reflector by gently pulling it straight backward out of the socket.
2. Disconnect the bulb from the electrical connector by pressing the tab on the connector with your finger and pulling the bulb upward.

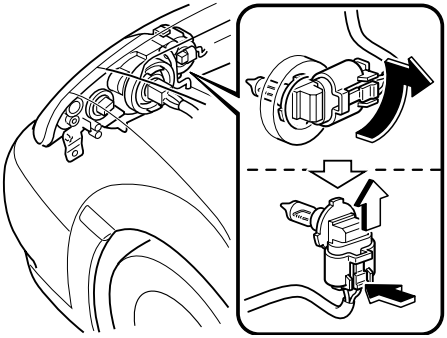

3. Install the new bulb in the reverse order of removal.

NOTE

- *If the halogen bulb is accidentally touched, it should be cleaned with rubbing alcohol before being used.*
- *Use the protective cover and carton of the replacement bulb to dispose of the old bulb promptly out of the reach of children.*

Low-beam bulb

(Xenon fusion bulb)

You cannot replace the low beam bulbs by yourself.
The bulbs must be replaced at an Authorized Mazda Dealer.

(Halogen bulbs)

1. Detach the electrical connector from the sealing cover by pulling it to the rear.

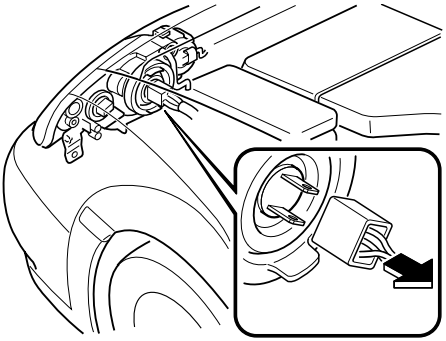

2. Detach the sealing cover from the bulb.
3. Unhook the bulb retaining spring.

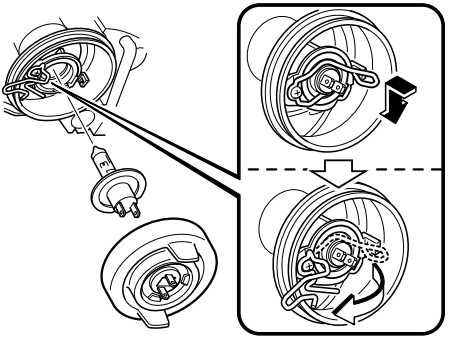

4. Swing the retaining spring out and away to free the headlight bulb.
5. Carefully remove the headlight bulb from the socket by pulling it straight back.
6. Replace the bulb.
7. Install the new bulb in the reverse order of removal.

NOTE

- *If the halogen bulb is accidentally touched, it should be cleaned with rubbing alcohol before being used.*
- *Use the protective cover and carton of the replacement bulb to dispose of the old bulb promptly out of the reach of children.*

▼Replacing a Fog Light Bulb*

Due to the complexity and difficulty of the procedure, the bulbs should be replaced by an Authorized Mazda Dealer.

▼Replacing a Bulb (Front)

1. If you are changing the right bulb, start the engine, turn the steering wheel all the way to the right, and turn off engine. If you are changing the left bulb, turn the steering wheel to the left.
2. Turn the center section of the plastic retainer counterclockwise and remove the retainers and partially peel back the mudguard.

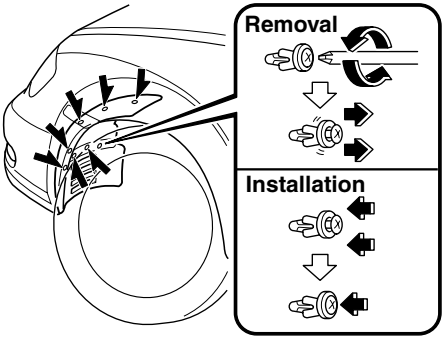

Front turn signal lights, Parking lights, Front side-marker lights

1. Turn the socket and bulb assembly counterclockwise and remove it.
2. Disconnect the bulb from the socket.

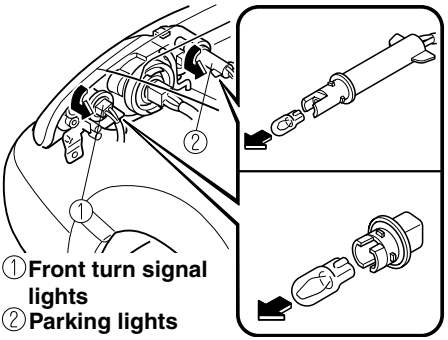

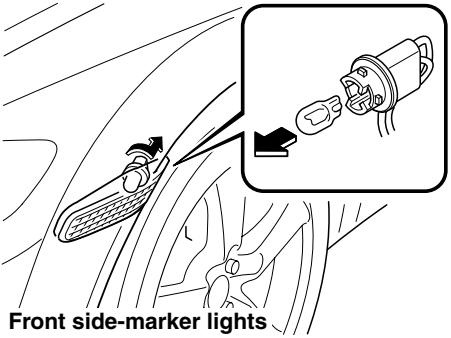

3. Install the new bulb in the reverse order of removal.

*Some models.

▼Replacing a Bulb (Interior)

Overhead light/Map lights (Front)

1. Remove the screws with a Phillips screwdriver.
2. Wrap a flathead screwdriver with a soft cloth to prevent damage to the trim and gently insert it in the overhead light as shown in the figure, and then remove the overhead light unit.

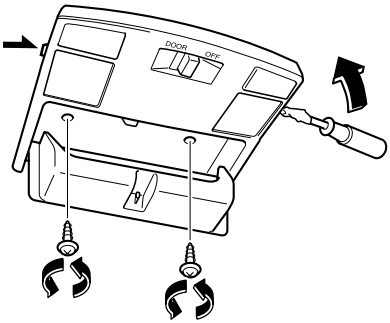

3. Turn the socket and bulb assembly counterclockwise and remove it.
4. Disconnect the bulb from the socket.

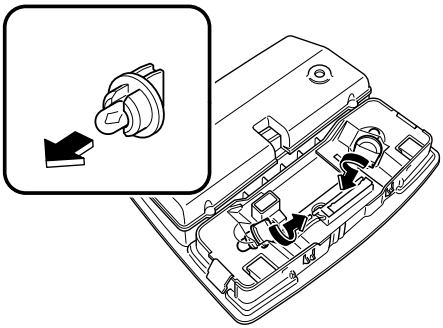

5. Install the new bulb in the reverse order of removal.

Overhead light (Rear), Courtesy lights, Vanity mirror lights

1. Wrap a small flathead screwdriver with a soft cloth to prevent damage to the lens and remove the lens by carefully prying on the edge of the lens with the screwdriver.
2. Disconnect the bulb by pulling it out.

Overhead light (Rear)

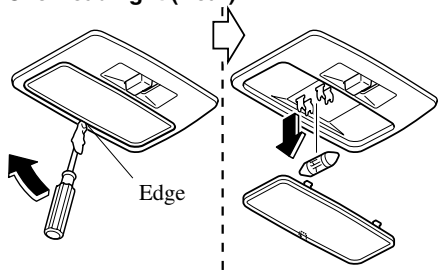

Courtesy lights

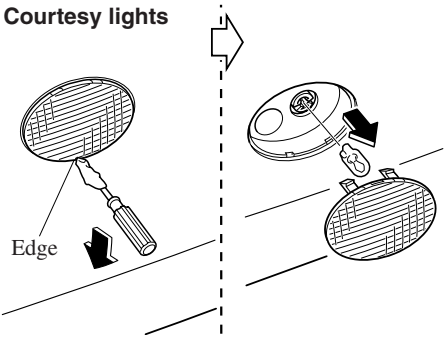

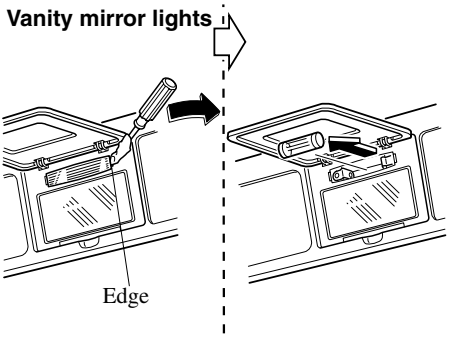

3. Install the new bulb in the reverse order of removal.

Trunk light

1. Press both sides of the lens cap to remove it.
2. Disconnect the bulb by pulling it out.

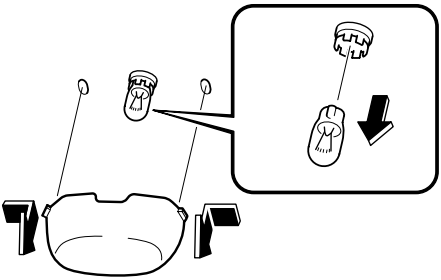

3. Install the new bulb in the reverse order of removal.

▼Replacing a Bulb (Rear)

Rear turn signal lights, Brake lights/ Taillights, Reverse lights

1. Pull the center section of the plastic retainer and remove the retainers and partially open the trunk side trim.

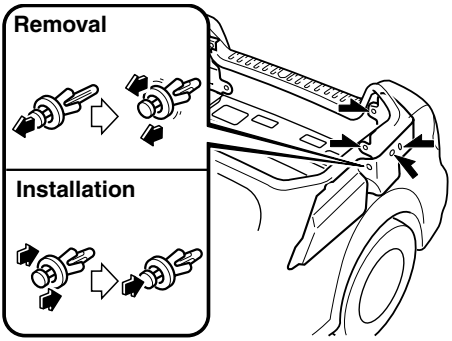

2. Turn the socket and bulb assembly counterclockwise and remove it.
3. Disconnect the bulb from the socket.

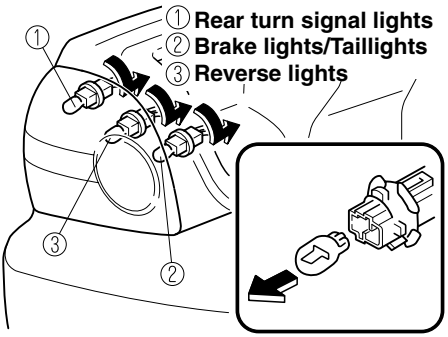

4. Install the new bulb in the reverse order of removal.

Rear side-marker lights

Due to the complexity and difficulty of the procedure, the bulbs should be replaced by an Authorized Mazda Dealer.

High-mount brake light

1. Turn the center section of the plastic retainer counterclockwise and remove the retainers and trunk rear trim.

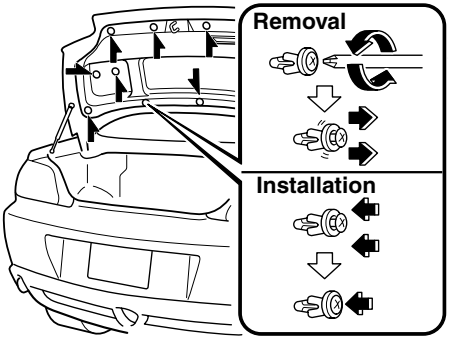

2. Turn the socket and bulb assembly counterclockwise and remove it.
3. Disconnect the bulb from the socket.

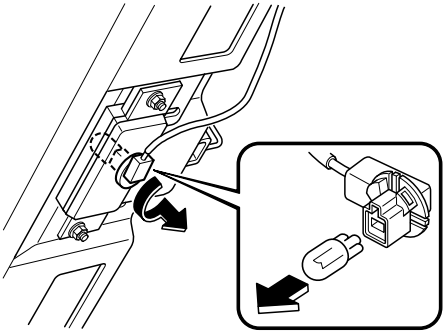

4. Install the new bulb in the reverse order of removal.

License plate light

1. Press the front of the lens to detach the front tabs.
2. Wrap a flathead screwdriver with a soft cloth to prevent damage to the lens and remove the lens by carefully prying on the edge of the lens with a flathead screwdriver.
3. Disconnect the bulb by pulling it out.

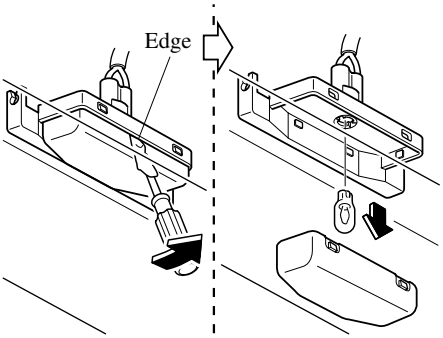

4. Install the new bulb in the reverse order of removal.

Fuses

Your vehicle's electrical system is protected by fuses.

If any lights, accessories, or controls don't work, inspect the appropriate circuit protector. If a fuse has blown, the inside element will be melted.

If the same fuse blows again, avoid using that system and consult an Authorized Mazda Dealer as soon as possible.

▼Fuse Replacement

Replacing the fuses on the driver's side

If the electrical system does not work, first inspect the fuses on the driver's side.

1. Turn off the ignition switch and other switches.
2. Open the fuse panel cover.

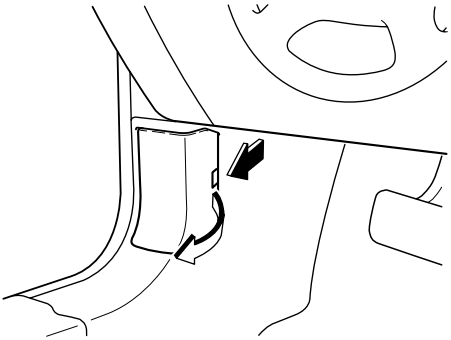

3. Pull the fuse straight out with the fuse puller provided on the inside of the engine compartment fuse block cover.

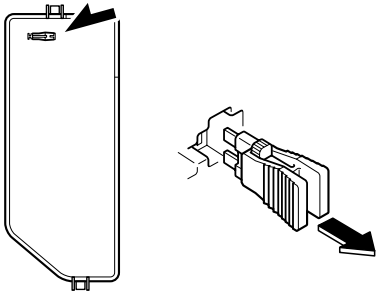

4. Inspect the fuse and replace it if it's blown.

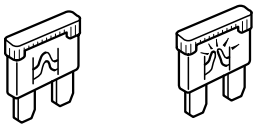

5. Insert a new fuse of the same amperage rating, and make sure it fits tightly. If it does not fit tightly, have an expert install it. We recommend an Authorized Mazda Dealer.
   If you have no spare fuses, borrow one of the same rating from a circuit not essential to vehicle operation, such as the AUDIO or CIGAR circuit.

⚠ CAUTION

Always replace a fuse with one of the same rating. Otherwise you may damage the electric system.

Replacing the fuses under the hood

If the headlights or other electrical components do not work and the fuses in the cabin are normal, inspect the fuse block under the hood. If a fuse is blown, it must be replaced. Follow these steps:

1. Turn off the ignition switch and all other switches.
2. Remove the fuse block cover.

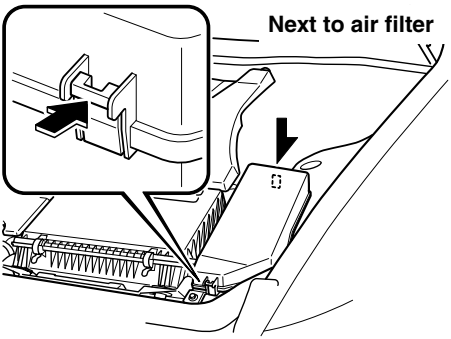

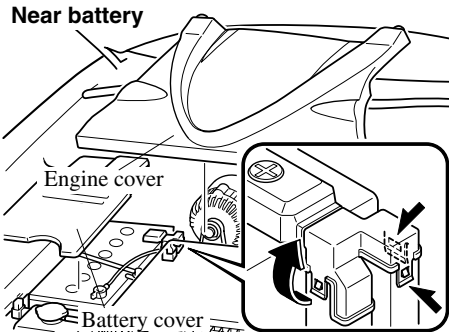

NOTE

Remove the engine and battery covers before removing the fuse block cover near the battery.

3. If any fuse but the MAIN fuse is blown, replace it with a new one **of the same amperage rating**.

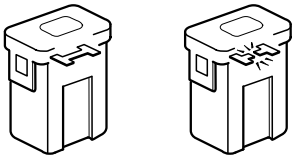

Normal Blown

WARNING

Do not replace the main fuse by yourself. Have an Authorized Mazda Dealer perform the replacement:

Replacing the fuse by yourself is dangerous because the MAIN fuse is a high current fuse. Incorrect replacement could cause an electrical shock or a short circuit resulting in a fire.

NOTE

Verify that the engine cover is securely installed.

▼Fuse Panel Description

Fuse block (Engine compartment)

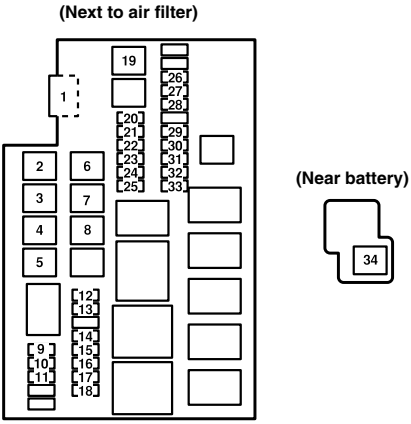

DESCRIPTION		FUSE RATING	PROTECTED COMPONENT
1	MAIN	120A	For protection of all circuits
2	HEATER	40A	Heater
3	AIR PUMP	60A	Air pump
4	BTN	30A	Power windows, Power door locks, Illuminated entry system, Moonroof*
5	DEFOG	50A	Rear window defroster
6	FAN	40A	Electric fan
7	ABS/DSC	60A	ABS, DSC*
8	ACC	30A	Lighter, Power control mirror, Accessory socket, Audio system
9	HEAD	15A	Headlight high beams*, Headlight cleaner*
10	HEAD LOW R	15A	Headlight low beam (RH)
11	HEAD LOW L	15A	Headlight low beam (LH)
12	DRL	15A	DRL* (Headlight high beams)
13	DSC	30A	DSC*
14	SEAT WARM	20A	Seat warmer*
15	H/CLEAN	20A	Headlight cleaner*
16	R.FOG	—	—

 *Some models.

DESCRIPTION		FUSE RATING	PROTECTED COMPONENT
17	FOG	15A	Fog lights*
18	A/C MAG	10A	Air conditioner
19	IG	30A	For protection of various circuits
20	IG KEY	15A	For protection of various circuits
21	STOP	15A	Brake lights
22	FUEL PUMP	20A	Fuel pump
23	HORN	15A	Horn
24	HAZARD	15A	Hazard warning flashers, Turn signals
25	ETV	15A	Electric throttle valve
26	WIPER	20A	Windshield wiper and washer
27	P.WIND	—	—
28	ENGINE	15A	Engine control system, Supplemental restraint system, ABS, Power steering
29	TAIL	10A	Taillights, License plate light, Parking lights, Front side-maker lights, Rear side-marker lights
30	ILLUMI	10A	Illuminated entry system
31	EGI COMP1	10A	Engine control system
32	EGI COMP2	10A	Engine control system
33	EGI INJ	15A	Fuel injector
34	EPS	60A	Power steering

*Some models.

Fuse panel (Driver's side)

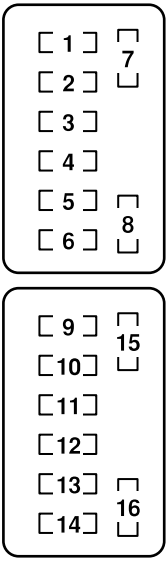

DESCRIPTION		FUSE RATING	PROTECTED COMPONENT
1	CIGAR	15A	Lighter
2	ACC	7.5A	Audio system, Power control mirror
3	AUX PWR	20A	Accessory socket
4	A/C	7.5A	Air conditioner
5	METER	10A	Instrument cluster
6	TCM	10A	Transmission control system
7	SPARE	—	—
8	SPARE	—	—
9	M.DEF	10A	Mirror defroster*
10	DSC	7.5A	DSC*
11	AUDIO	20A	Audio system*
12	D.LOCK	30A	Power door locks, Moonroof*
13	P.WIND	30A	Power windows
14	ROOM	15A	Interior lights
15	SPARE	—	—
16	SPARE	—	—

*Some models.

How to Minimize Environmental Paint Damage

The paintwork on your Mazda represents the latest technical developments in composition and methods of application.

Environmental hazards, however, can harm the paint's protective properties, if proper care is not taken.

Here are some examples of possible damage, with tips on how to prevent them.

▼Etching Caused by Acid Rain or Industrial Fallout

Occurrence

Industrial pollutants and vehicle emissions drift into the air and mix with rain or dew to form acids. These acids can settle on a vehicle's finish. As the water evaporates, the acid becomes concentrated and can damage the finish.
And the longer the acid remains on the surface, the greater the chance is for damage.

Prevention

It is necessary to wash and wax your vehicle to preserve its finish according to the instructions in this section. These steps should be taken immediately after you suspect that acid rain has settled on your vehicle's finish.

▼Damage Caused by Bird Dropping, Insects, or Tree Sap

Occurrence

Bird droppings contain acids. If these aren't removed they can eat away the clear and color base coat of the vehicle's paintwork.

When insects stick to the paint surface and decompose, corrosive compounds form. These can erode the clear and color base coat of the vehicle's paintwork if they are not removed.

Tree sap will harden and adhere permanently to the paint finish. If you scratch the sap off while it is hard, some vehicle paint could come off with it.

Prevention

It is necessary to have your Mazda washed and waxed to preserve its finish according to the instructions in this section. This should be done as soon as possible.

Bird droppings can be removed with a soft sponge and water. If you are traveling and these are not available, a moistened tissue may also take care of the problem. The cleaned area should be waxed according to the instructions in this section.
Insects and tree sap are best removed with a soft sponge and water or a commercially available chemical cleaner.

Another method is to cover the affected area with dampened newspaper for one to two hours. After removing the newspaper, rinse off the loosened debris with water.

▼Water Marks

Occurrence

Rain, fog, dew, and even tap water can contain harmful minerals such as salt and lime. If moisture containing these minerals settles on the vehicle and evaporates, the minerals will concentrate and harden to form white rings. The rings can damage your vehicle's finish.

Prevention

It is necessary to wash and wax your vehicle to preserve its finish according to the instructions in this section. These steps should be taken immediately after you find water marks on your vehicle's finish.

▼Paint Chipping

Occurrence

Paint chipping occurs when gravel thrown in the air by another vehicle's tires hits your vehicle.

How to avoid paint chipping

Keeping a safe distance between you and the vehicle ahead reduces the chances of having your paint chipped by flying gravel.

NOTE

- *The paint chipping zone varies with the speed of the vehicle. For example, when traveling at 90 km/h (56 mph), the paint chipping zone is 50 m (164 ft).*
- *In low temperatures a vehicle's finish hardens. This increases the chance of paint chipping.*
- *Chipped paint can lead to rust forming on your Mazda. Before this happens, repair the damage by using Mazda touch-up paint according to the instructions in this section. Failure to repair the affected area could lead to serious rusting and expensive repairs.*

Exterior Care

Follow **all** label and container directions when using a chemical cleaner or polish. Read all warnings and cautions.

▼Maintaining the Finish

Washing

To help protect the finish from rust and deterioration, wash your Mazda thoroughly and frequently, at least once a month, with lukewarm or cold water.

If the vehicle is washed improperly, the paint surface could be scratched. Here are some examples of how scratching could occur.

Scratches occur on the paint surface when:
- The vehicle is washed without first rinsing off dirt and other foreign matter.
- The vehicle is washed with a rough, dry, or dirty cloth.
- The vehicle is washed at a car wash that uses brushes that are dirty or too stiff.
- Cleansers or wax containing abrasives are used.

NOTE
- *Mazda is not responsible for scratches caused by automatic car washes or improper washing.*
- *Scratches are more noticeable on vehicles with darker paint finishes.*

To minimize scratches on the vehicle's paint finish:
- Rinse off any dirt or other foreign matter using lukewarm or cold water before washing.
- Use plenty of lukewarm or cold water and a soft cloth when washing the vehicle. Do not use a nylon cloth.
- Rub gently when washing or drying the vehicle.
- Take your vehicle only to a car wash that keeps its brushes well maintained.
- Don't use abrasive cleansers or wax that contain abrasives.

⚠ CAUTION

Don't use steel wool, abrasive cleaners, or strong detergents containing highly alkaline or caustic agents on chrome-plated or anodized aluminum parts. This may damage the protective coating; also, cleaners and detergents may discolor or deteriorate the paint.

Pay special attention to removing salt, dirt, mud, and other foreign material from the underside of the fenders, and make sure the drain holes in the lower edges of the doors and rocker panels are clean.

Insects, tar, tree sap, bird droppings, industrial fallout, and similar deposits can damage the finish if not removed immediately. When prompt washing with plain water is ineffective, use a mild soap made for use on vehicles.

Thoroughly rinse off all soap with lukewarm or cold water. Don't allow soap to dry on the finish.

After washing the vehicle, dry it with a clean chamois to prevent water spots from forming.

WARNING

Dry wet brakes by driving very slowly and applying the brakes lightly until brake performance is normal:

Driving with wet brakes is dangerous. Increased stopping distance or the vehicle pulling to one side when braking could result in a serious accident. Light braking will indicate whether the brakes have been affected.

Waxing

Your vehicle needs to be waxed when water no longer beads on the finish. Always wash and dry the vehicle before waxing it. In addition to the vehicle body, wax the metal trim to maintain its luster.

1. Use wax which contains no abrasives. Waxes containing abrasive will remove paint and could damage bright metal parts.
2. Use a good grade of natural wax for metallic, mica, and solid colors.
3. When waxing, coat evenly with the sponge supplied or a soft cloth.
4. Wipe off the wax with a soft cloth.

NOTE

A spot remover to remove oil, tar, and similar materials will usually also take off the wax. Rewax these areas even if the rest of the vehicle doesn't need it.

▼Repairing Damage to the Finish

Deep scratches or chips on the finish should be repaired promptly. Exposed metal quickly rusts and can lead to major repairs.

CAUTION

If your Mazda is damaged and needs metal parts repaired or replaced, make sure the body shop applies anti-corrosion materials to all parts, both repaired and new. This will prevent them from rusting.

▼Bright-Metal Maintenance

- Use tar remover to remove road tar and insects. Never do this with a knife or similar tool.
- To prevent corrosion on bright-metal surfaces, apply wax or chrome preservative and rub it to a high luster.
- During cold weather or in coastal areas, cover bright-metal parts with a coating of wax or preservative heavier than usual. It would also help to coat them with noncorrosive petroleum jelly or some other protective compound.

CAUTION

Don't use steel wool, abrasive cleaners, or strong detergents containing highly alkaline or caustic agents on chrome-plated or anodized aluminum parts. This may result in damage to the protective coating and cause discoloration or paint deterioration.

▼Underbody Maintenance

Road chemicals and salt used for ice and snow removal and solvents used for dust control may collect on the underbody. If not removed, they will speed up rusting and deterioration of such underbody parts as fuel lines, frame, floor pan, and exhaust system, even though these parts may be coated with anti-corrosive material.

Thoroughly flush the underbody and wheel housings with lukewarm or cold water at the end of each winter. Try also to do this every month.

Pay special attention to these areas because they easily hide mud and dirt. **It will do more harm than good to wet down the road grime without removing it.**

The lower edges of doors, rocker panels, and frame members have drain holes that should not be clogged. Water trapped there will cause rusting.

⚠ WARNING

Dry wet brakes by driving very slowly and applying the brakes lightly until brake performance is normal:

Driving with wet brakes is dangerous. Increased stopping distance or the vehicle pulling to one side when braking could result in a serious accident. Light braking will indicate whether the brakes have been affected.

▼Aluminum Wheel Maintenance

A protective coating is provided over the aluminum wheels. Special care is needed to protect this coating.

NOTE

- *Don't use a wire brush or any abrasive cleaner, polishing compound, or solvent on aluminum wheels. They may damage the coating.*
- *Only use a mild soap or neutral detergent and always use a sponge or soft cloth to clean the wheels.*
  Rinse thoroughly with lukewarm or cold water. Also, be sure to clean the wheels after driving on dusty or salted roads. This helps prevent corrosion.
- *Avoid washing your vehicle in an automatic car wash that uses high-speed or hard brushes.*
- *If your aluminum wheels lose luster, wax the wheels.*

Interior Care

▼Dashboard Precautions

Prevent caustic solutions such as perfume and cosmetic oils from contacting the dashboard. They'll damage and discolor it. If these solutions get on the dashboard, wipe them off immediately.

⚠ CAUTION

Do not use glazing agents. Glazing agents contain ingredients which may cause discoloration, wrinkling, cracks and peeling.

▼Cleaning the Upholstery and Interior Trim

Vinyl

Remove dust and loose dirt from vinyl with a whisk broom or vacuum cleaner. Clean vinyl with a leather-and-vinyl cleaner.

Leather*

Real leather isn't uniform and may have scars, scratches, and wrinkles. Clean it with a leather cleaner or mild soap.
If the leather gets wet from rain, remove the moisture as soon as possible and dry in a shaded area.
If the seats get wet, promptly remove moisture with a dry cloth and allow it to further dry in a shaded area.
If moisture is not removed, it will cause hardening and shrinkage of the leather.
Do not leave vinyl products on the seats for long periods as they may affect the leather quality and coloring.

Fabric*

Remove dust and loose dirt from fabric with a whisk broom or vacuum cleaner. Clean it with a mild soap solution good for upholstery and carpets. Remove fresh spots immediately with a fabric spot cleaner.

To keep the fabric looking clean and fresh, take care of it. Otherwise its color will be affected, it can be stained easily, and its fire-resistance may be reduced.

⚠ CAUTION

Use only recommended cleaners and procedures. Others may affect appearance and fire-resistance.

Suede-like material*

Stains which are not treated immediately will be difficult to remove later, and may cause fading or discoloration.
Remove stains as soon as possible.

To clean, wipe with a soft, damp cloth. Then buff with a soft, dry cloth.

If stains cannot be removed using plain water, try wiping with soapy water or a mild detergent.

⚠ CAUTION

Do not clean the suede with leather cleaner, a detergent, or soap. It will cause discoloration.

To dry away any water, wipe with a soft, dry cloth.

⚠ CAUTION

Sharp or pointed metal objects can damage the suede beyond repair.

*Some models.

Piano black panel

The following parts are fitted with panels that have been treated with a special coating that resists scratching.

- Center panel
- Door switch panel

When the panel needs to be cleaned, use a soft cloth to wipe off dirt from the surface.

NOTE

Scratches or nicks on the panels resulting from the use of a hard brush or cloth may not be repairable.

▼Cleaning the Lap/Shoulder Belt Webbing

Clean the webbing with a mild soap solution recommended for upholstery or carpets. Follow instructions. Don't bleach or dye the webbing; this may weaken it.

After cleaning the belts, thoroughly dry the belt webbing and make sure there is no remaining moisture before retracting them.

⚠ WARNING

Have an Authorized Mazda Dealer replace damaged seat belts immediately:

Using damaged seat belts is dangerous. In a collision, damaged belts cannot provide adequate protection.

▼Cleaning the Window Interiors

If the windows become covered with an oily, greasy, or waxy film, clean them with glass cleaner. Follow the directions on the container.

⚠ CAUTION

- *Don't scrape or scratch the inside of the rear window. You may damage the rear window defroster grid.*
- *When washing the inside rear window, use a soft cloth dampened in lukewarm water, gently wiping the antenna lines. Use of glass cleaning products could damage the antenna.*

9 Customer Information and Reporting Safety Defects

Important consumer information including warranties and add-on equipment.

Customer Assistance 9-2
Customer Assistance (U.S.A.) 9-2
Customer Assistance (Canada) 9-4
Customer Assistance (Puerto Rico) 9-7

Mazda Importer/Distributors 9-8
Importer/Distributor 9-8
Distributor in Each Area 9-8

Warranty 9-9
Warranties for Your Mazda 9-9
Outside the United States 9-10
Outside Canada 9-11
Registering Your Vehicle in A Foreign Country (Except United States and Canada) 9-12
Add-On Non-Genuine Parts and Accessories 9-13

Cell Phones 9-14
Cell Phones Warning 9-14

Type Approval of Equipment 9-15
Type Approval of Equipment 9-15

Uniform Tire Quality Grading System (UTQGS) 9-16
Uniform Tire Quality Grading System (UTQGS) 9-16

Tire Information (U.S.A.) 9-18
Tire Labeling 9-18
Location of the Tire Label (Placard) 9-24
Tire Maintenance 9-27
Vehicle Loading 9-30
Steps for Determining the Correct Load Limit: 9-37

Reporting Safety Defects 9-38
Reporting Safety Defects (U.S.A.) 9-38
Reporting Safety Defects (Canada) ... 9-39

Service Publications 9-40
Service Publications 9-40

Customer Assistance (U.S.A.)

Your complete and permanent satisfaction is our business. We are here to serve you. All Authorized Mazda Dealers have the knowledge and the tools to keep your Mazda vehicle in top condition.
If you have any questions or recommendations for improvement regarding the service of your Mazda vehicle or servicing by Mazda Dealer personnel, we recommend that you take the following steps:

▼STEP 1: Contact Your Mazda Dealer

Discuss the matter with an Authorized Mazda Dealer. This is the quickest and best way to address the issue. If your concern has not been resolved by the CUSTOMER RELATIONS, SALES, SERVICE, or PARTS MANAGER, then please contact the GENERAL MANAGER of the dealership or the OWNER.

▼STEP 2: Contact Mazda North American Operations

If for any reason you feel the need for further assistance after contacting your dealership management, you can reach Mazda North American Operations by one of the following ways.

Log on: at www.mazdaUSA.com

Answers to many questions, including how to locate or contact a local Mazda dealership in the U.S., can be found here.

E-mail: click on “Contact Us” at the bottom of the page at www.mazdaUSA.com

By phone at: 1 (800) 222-5500

By letter at:
Attn: Customer Assistance
Mazda North American Operations
7755 Irvine Center Drive
Irvine, CA 92618-2922
P.O. Box 19734
Irvine, CA 92623-9734

In order to serve you efficiently and effectively, please help us by providing the following information:

1. Your name, address, and telephone number
2. Year and model of vehicle

3. Vehicle Identification Number (17 digits, noted on your registration or title or located on the upper driver's side corner of the dash)
4. Purchase date and current mileage
5. Your dealer's name and location
6. Your question(s)

If you live outside the U.S.A., please contact your nearest Mazda Distributor.

▼STEP 3: Contact Better Business Bureau (BBB)

Mazda North American Operations realizes that mutual agreement on some issues may not be possible. As a final step to ensure that your concerns are being fairly considered, Mazda North American Operations has agreed to participate in a dispute settlement program administered by the Better Business Bureau (BBB) system, at no cost to you the consumer.

BBB AUTO LINE works with consumers and the manufacturer in an attempt to reach a mutually acceptable resolution of any warranty related concerns. If the BBB is not able to facilitate a settlement they will provide an informal hearing before an arbitrator.

You are required to resort to BBB AUTO LINE before exercising rights or seeking remedies under the Federal Magnuson-Moss Warranty Act, 15 U.S.C. § 2301 et seq. To the extent permitted by the applicable state “Lemon Law”, you are also required to resort to BBB AUTO LINE before exercising any rights or seeking remedies under the “Lemon Law”. If you choose to seek remedies that are not created by the Magnuson-Moss Warranty Act or the applicable state “Lemon Law”, you are not required to first use BBB AUTO LINE.

The whole process normally takes 40 days or less. The arbitration decision is not binding on you or Mazda else you accept the decision. For more information about BBB AUTO LINE, including current eligibility standards, please call 1-800-955-5100 or visit the BBB website at www.lemonlaw.bbb.org.

Being truly committed to customer satisfaction is more than a phrase with Mazda. We hope to satisfy every customer directly, but if there is ever a question about our decision, Mazda believes in providing a fast, fair and free method such as the BBB AUTO LINE to ensure Mazda delivers on our commitment to do the right thing for our customers!

Customer Assistance (Canada)

▼Satisfaction Review Process

Your complete and permanent satisfaction is of primary concern to Mazda. All Authorized Mazda Dealers have both the knowledge and tools to keep your Mazda in top condition. In our experience, any questions, problems, or complaints regarding the operation of your Mazda or any other general service transactions are most effectively resolved by your dealer. If the cause of your dissatisfaction cannot adequately be addressed by normal dealership procedures, we recommend that you take the following steps:

▼STEP 1: Contact the Mazda Dealer

Discuss the matter with a member of dealership management. If the Service Manager has already reviewed your concerns, contact the owner of the dealership or its General Manager.

▼STEP 2: Contact the Mazda Regional Office

If you feel that you still require assistance, ask the dealer Service Manager to arrange for you to meet the local Mazda Service Representative. If more expedient, contact Mazda Canada Inc.Regional Office nearest you for such arrangements. Regional Office address and phone numbers are shown (page 9-6).

▼STEP 3: Contact the Mazda Customer Relations Department

If still not substantially satisfied, contact the Customer Relations Department, Mazda Canada Inc., 55 Vogell Road, Richmond Hill, Ontario, L4B 3K5 Canada TEL: 1 (800) 263-4680.
Provide the Department with the following information:

1. Your name, address and telephone number
2. Year and model of vehicle
3. Vehicle Identification Number (VIN). Refer to the “Vehicle Identification Labels” page of section 10 of this manual for the location of the VIN.
4. Purchase date
5. Present odometer reading
6. Your dealer's name and location
7. The nature of your problem and/or cause of dissatisfaction

The Department, in cooperation with the local Mazda Service Representative, will review the case to determine if everything possible has been done to ensure your satisfaction.

Please recognize that the resolution of service problems in most cases requires the use of your Mazda dealer's service facilities, personnel and equipment. We urge you to follow the above three steps in sequence for most effective results.

▼Mediation/Arbitration Program

Occasionally a customer concern cannot be resolved through Mazda's Customer Satisfaction Program. If after exhausting the procedures in this manual your concern is still not resolved, you have another option.

Mazda Canada Inc. participates in an arbitration program administered by the Canadian Motor Vehicle Arbitration Plan (CAMVAP). CAMVAP will advise you about how your concern may be reviewed and resolved by an independent third party through binding arbitration.

Your complete satisfaction is the goal of Mazda Canada Inc. and our dealers. Mazda's participation in CAMVAP makes a valuable contribution to our achieving that goal. There is no charge for using CAMVAP. CAMVAP results are fast, fair and final as the award is binding on both you and Mazda Canada Inc.

▼Canadian Motor Vehicle Arbitration Plan (CAMVAP)

If a specific item of concern arises, where a solution cannot be reached between an owner, Mazda, and/or one of it's dealers (that all parties cannot agree upon), the owner may wish to use the services offered by the Canadian Motor Vehicle Arbitration Plan (CAMVAP).

CAMVAP uses the services of Provincial Administrators to assist consumers in scheduling and preparing for their arbitration hearings. However, before you can proceed with CAMVAP you must follow your Mazda dispute resolution process as outlined previously.

Customer Assistance

CAMVAP is fully implemented in all provinces and territories.
Consumers wishing to obtain further information about the Program should contact the Provincial Administrator at 1 (800) 207-0685, or by contacting the Canadian Motor Vehicle Arbitration Plan Office at:

Canadian Motor Vehicle Arbitration Plan
235 Yorkland Boulevard, suite 300
North York, Ontario
M2J 4Y8
http://camvap.ca

Provincial Administrators may be reached locally as listed below:

Province/Territory	CAMVAP Number
British Columbia & Yukon Territories	1 (800) 207-0685
Alberta & Northwest Territories	1 (800) 207-0685
Saskatchewan	1 (800) 207-0685
Manitoba	1 (800) 207-0685
Ontario	1 (800) 207-0685
Atlantic Canada	1 (800) 207-0685
Quebec	1 (800) 207-0685

▼Regional Offices

REGIONAL OFFICES	AREAS COVERED
MAZDA CANADA INC. WESTERN REGION 8171 ACKROYD ROAD SUITE 2000 RICHMOND B.C. V6X 3K1 (604) 303-5670	ALBERTA, BRITISH COLUMBIA, MANITOBA, SASKATCHEWAN, YUKON
MAZDA CANADA INC. CENTRAL/ATLANTIC REGION 55 VOGELL ROAD, RICHMOND HILL, ONTARIO, L4B 3K5 (905) 787-7000	ONTARIO
MAZDA CANADA INC. QUEBEC REGION 6111 ROUTE TRANS CANADIENNE POINTE CLAIRE, QUEBEC H9R 5A5 (514) 694-6390	QUEBEC, NEW BRUNSWICK, NOVA SCOTIA, PRINCE EDWARD ISLAND, NEWFOUNDLAND

Customer Assistance (Puerto Rico)

Your complete and permanent satisfaction is our business. That is why all Authorized Mazda Dealers have the knowledge and the tools to keep your Mazda vehicle in top condition.
If you have any questions or recommendations for improvement regarding the service of your Mazda vehicle or servicing by Mazda Dealer personnel, we recommend that you take the following steps:

▼STEP 1

Discuss the matter with an Authorized Mazda Dealer. This is the quickest and best way to address the issue. If your concern has not been resolved by the CUSTOMER RELATIONS, SALES, SERVICE, or PARTS MANAGER, then please contact the GENERAL MANAGER of the dealership or the OWNER.

▼STEP 2

If, after following STEP 1, you feel the need for further assistance, please contact your area's Mazda representative (Indicated on the next page).

Please help us by providing the following information:

1. Your name, address, and telephone number
2. Year and model of vehicle
3. Vehicle Identification Number (17 digits, noted on your registration or title or located on the upper driver's side corner of the dash)
4. Purchase date and current mileage
5. Your dealer's name and location
6. Your question(s)

Mazda Importer/Distributors

Importer/Distributor

▼U.S.A.

Mazda North American Operations
7755 Irvine Center Drive
Irvine, CA 92618-2922 U.S.A.
P.O. Box 19734
Irvine, CA 92623-9734 U.S.A.
TEL: 1 (800) 222-5500 (in U.S.A.)
(949) 727-1990 (outside U.S.A.)

Distributor in Each Area

▼CANADA

Mazda Canada Inc.
55 Vogell Road, Richmond Hill,
Ontario, L4B 3K5 Canada
TEL: 1 (800) 263-4680 (in Canada)
(905) 787-7000 (outside Canada)

▼PUERTO RICO/U.S. Virgin Island

Plaza Motors Corp. (Mazda de Puerto Rico)
P.O. Box 362722, San Juan, Puerto Rico
00936-2722
TEL: (787) 641-9300

▼GUAM

Triple J Motors
157 South Marine Drive, Tamuning,
GUAM 96911 USA
P.O. Box 6066 Tamuning, Guam 96931
TEL: (671) 649-6555

▼SAIPAN

Pacific International Marianas, Inc.
(d.b.a. Midway Motors)
P.O. Box 887 Saipan, MP 96950
TEL: (670) 234-7524

Triple J Saipan, Inc.
(d.b.a. Triple J Motors)
P.O. Box 500487 Saipan, MP 96950-0487
TEL: (670) 234-7133/3051

▼AMERICAN SAMOA

Polynesia Motors, Inc.
P.O. Box 1120, Pago Pago, American
Samoa 96799
TEL: (684) 699-9347

Warranties for Your Mazda

- New Vehicle Limited Warranty
- Distributor Major Component Limited Warranty (Canada only)
- Safety Restraint System Limited Warranty
- Anti-perforation Limited Warranty
- Federal Emission Control Warranty (U.S.A. only)
  - Emission Defect Warranty
  - Emission Performance Warranty
- California Emission Control Warranty (U.S.A. only)
- Emission Control Warranty (Canada only)
- Replacement Parts and Accessories Limited Warranty
- Tire Warranty

NOTE
Detailed warranty information is provided with your Mazda.

Outside the United States

Government regulations in the United States require that automobiles meet specific emission regulations and safety standards. Therefore, vehicles built for use in the United States may differ from those sold in other countries.

The differences may make it difficult or even impossible for your vehicle to receive satisfactory servicing in other countries. We strongly recommend that you NOT take your Mazda outside the United States. However, in the event that you are moving to Canada permanently, Mazda vehicles built for use in the United States could be eligible for exportation to Canada with specific vehicle modifications to comply with the Canadian Motor Vehicle Safety requirements (CMVSS).

NOTE
The above is applicable for a permanent import/export situation and not related to travelers on vacation.

You may have the following problems if you do take your vehicle outside of the United States:
- Recommended fuel may be unavailable. Any kind of leaded fuel or low-octane fuel will affect vehicle performance and damage the emission controls and engine.
- Proper repair facilities, tools, testing equipment, and replacement parts may not be available.

Please refer to your Manufacturer's Warranty Booklet for more information.

Outside Canada

Government regulations in Canada require that automobiles meet specific emission regulations and safety regulations. Therefore, vehicles built for use in Canada may differ from those sold in other countries.

The differences may make it difficult or even impossible for your vehicle to receive satisfactory servicing in other countries. We strongly recommend that you NOT take your Mazda outside Canada. However, in the event that you are moving to the United States permanently, Mazda vehicles built for use in Canada could be eligible for exportation to the United States with specific vehicle modifications to comply with the United States Federal Motor Vehicle Safety Standards (FMVSS).

NOTE
The above is applicable for a permanent import/export situation and not related to travelers on vacation.

You may have the following problems if you do take your vehicle outside of Canada:
- Recommended fuel may be unavailable. Any kind of leaded fuel or low-octane fuel will affect vehicle performance and damage the emission controls and engine.
- Proper repair facilities, tools, testing equipment, and replacement parts may not be available.

Please refer to your Manufacturer's Warranty Booklet for more information.

Registering Your Vehicle in A Foreign Country (Except United States and Canada)

Government regulations in your country could require that automobiles meet specific emission and safety standards.
Vehicles built for your country may differ from those built for other countries. In addition to registration problems, satisfactory service may be difficult or even impossible in another country.

The fuel specified for your vehicle may be unavailable.

Parts, servicing techniques, and tools necessary to maintain and repair your vehicle may be unavailable.

There might not be an Authorized Mazda Dealer in the country you plan to take your vehicle.

The Mazda warranty is valid only in certain countries.

Add-On Non-Genuine Parts and Accessories

Non-genuine parts and accessories for Mazda vehicles can be found in stores.
These may fit your vehicle, but they are not approved by Mazda for use with Mazda vehicles. When you install non-genuine parts or accessories, they could affect your vehicle's performance or safety systems; the Mazda warranty doesn't cover this. Before you install any non-genuine parts or accessories, consult an Authorized Mazda Dealer.

⚠ WARNING

Always consult an Authorized Mazda Dealer before you install non-genuine parts or accessories:

Installation of non-genuine parts or accessories is dangerous. Improperly designed parts or accessories could seriously affect your vehicle's performance or safety systems. This could cause you to have an accident or increase your chances of injuries in an accident.

Be very careful in choosing and installing add-on electrical equipment, such as mobile telephones, two-way radios, stereo systems, and car alarm systems:

Incorrectly choosing or installing improper add-on equipment or choosing an improper installer is dangerous. Essential systems could be damaged, causing engine stalling, air-bag (SRS) activation, ABS inactivation, or a fire in the vehicle.

Mazda assumes no responsibility for death, injury, or expenses that may result from the installation of add-on non-genuine parts or accessories.

Cell Phones Warning

WARNING

Please comply with the legal regulations concerning the use of communication equipment in vehicles in your country:

Use of any electrical devices such as cell phones, computers, portable radios, vehicle navigation or other devices by the driver while the vehicle is moving is dangerous. Dialing a number on a cell phone while driving also ties-up the driver's hands. Use of these devices will cause the driver to be distracted and could lead to a serious accident. If a passenger is unable to use the device, pull off the right-of-way to a safe area before use. If use of a cell phone is necessary despite this warning, use a hands-free system to at least leave the hands free to drive the vehicle. Never use a cell phone or other electrical devices while the vehicle is moving and, instead, concentrate on the full-time job of driving.

Type Approval of Equipment

Immobilizer system

Type approval of the Antenna Coil Transceiver	
Country	Approval Number
CDN	Canada: 3043104475A5 3
USA	FCC ID: NT8-15607PAT3XCVR

Uniform Tire Quality Grading System (UTQGS)

This information relates to the tire grading system developed by the U.S. National Highway Traffic Safety Administration for grading tires by tread wear, traction, and temperature performance.

▼Tread Wear

The tread wear grade is a comparative rating based on the wear rate of the tire when tested under controlled conditions on a specified government test course.
For example, a tire graded 150 would wear one-and-a-half times as well on the government course as a tire graded 100.

The relative performance of tires depends upon the actual conditions of their use, however, and may depart significantly from the norm because of variations in driving habits, service practices and differences in road characteristics and climate.

▼Traction-AA, A, B, C

The traction grades, from highest to lowest, are AA, A, B, and C. These grades represent the tire's ability to stop on wet pavement as measured under controlled conditions on specified government test surfaces of asphalt and concrete. A tire marked C may have poor traction performance.

⚠ WARNING

The traction grade assigned to this tire is based on braking (straight ahead) traction tests and does not include acceleration cornering (turning), hydroplaning, or peak traction characteristics.

▼Temperature-A, B, C

The temperature grades A (the highest), B, and C, represent the tire's resistance to the generation of heat and its ability to dissipate heat when tested under controlled conditions on a specified indoor laboratory test wheel.
Sustained high temperature can cause the material of the tire to degenerate and reduce tire life, and excessive temperatures can lead to sudden tire failure.

Grade C corresponds to a level of performance which all passenger vehicle tires must meet under the Federal Motor Vehicle Safety Standard No. 109. Grades B and A represent higher levels of performance on the laboratory test wheel than the minimum required by law.

WARNING

Keep your vehicle's tires properly inflated and not overloaded:

Driving with improperly inflated or overloaded tires is dangerous. Excessive speed, underinflation, or excessive loading, either separately or in combination, can cause heat buildup and possible tire failure. The temperature grade for this tire is established for a tire that is properly inflated and not overloaded.

These grades will be added to the sidewalls of passenger vehicle tires over the next several years according to a schedule established by the NHTSA and the tire manufacturers.

The grade of tires available as standard or optional equipment on Mazda vehicles may vary with respect to grade.

ALL PASSENGER VEHICLE TIRES MUST CONFORM TO THESE GRADES AND TO ALL OTHER FEDERAL TIRE-SAFETY REQUIREMENTS.

▼Uniform Tire Quality Grading

Quality grades can be found where applicable on the tire sidewall between tread shoulder and maximum section width.
For example:
Treadwear 200 Traction AA Temperature A

UTQGS MARK (example)

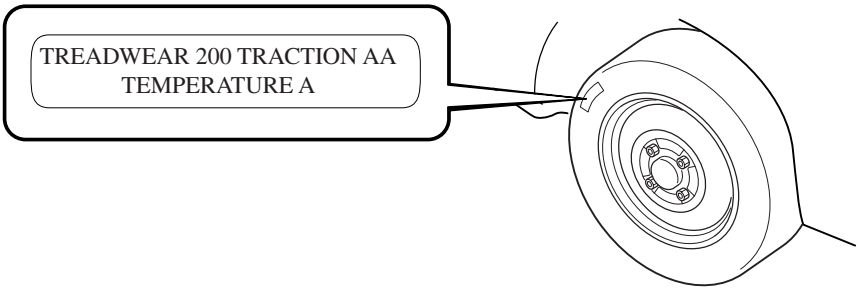

Tire Information (U.S.A.)

Tire Labeling

Federal law requires tire manufacturers to place standardized information on the sidewall of all tires. This information identifies and describes the fundamental characteristics of the tire and also provides a tire identification number for safety standard certification and in case of a recall.

▼Information on Passenger Vehicle Tires

Please refer to the diagram below.

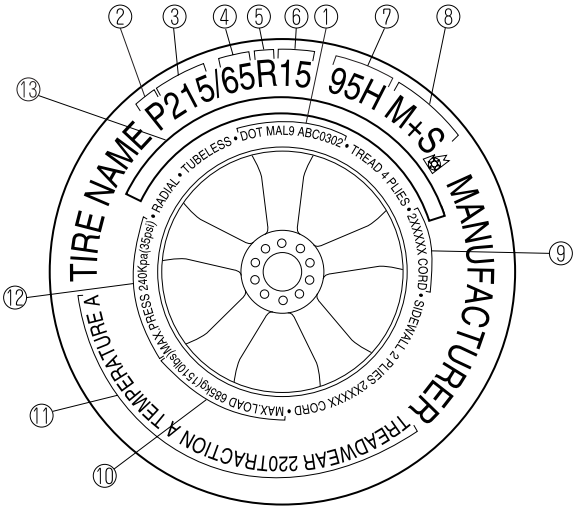

1. TIN: U.S. DOT tire identification number
2. Passenger car tire
3. Nominal width of tire in millimeters
4. Ratio of height to width (aspect ratio)
5. Radial
6. Rim diameter code
7. Load index & speed symbol
8. Severe snow conditions
9. Tire ply composition and materials used
10. Max. load rating

11. Tread wear, traction and temperature grades
12. Max. permissible inflation pressure
13. SAFETY WARNING

P215/65R15 95H is an example of a tire size and load index rating. Here is an explanation of the various components of that tire size and load index rating. Note that the tire size and load index rating may be different from the example.

P

Indicates a tire that may be installed on cars, SUVs, minivans and light trucks as designated by the Tire and Rim Association (T&RA).

NOTE

If your tire size does not begin with a letter this may mean it is designated by either ETRTO (European Tire and Rim Technical Organization) or JATMA (Japan Tire Manufacturing Association).

215

“215” is the nominal width of the tire in millimeters. This three-digit number gives the width in millimeters of the tire from sidewall edge to sidewall edge. In general, the larger the number, the wider the tire.

65

“65” is the aspect ratio. This two-digit number indicates the tire's ratio of height to width.

R

“R” is the tire construction symbol. R indicates “Radial ply construction”.

15

“15” is the wheel rim diameter in inches.

95

“95” is the Load Index. This two-or three-digit number indicates how much weight each tire can support.

H

"H" is the speed rating. The speed rating denotes the maximum speed for which the use of the tire is rated.

Letter Rating	Speed Rating
Q	99 mph
R	106 mph
S	112 mph
T	118 mph
U	124 mph
H	130 mph
V	149 mph
W	168* mph
Y	186* mph

* For tires with a maximum speed capability over 149 mph, tire manufacturers sometimes use the letters ZR. For tires with a maximum speed capability over 186 mph, tire manufacturers always use the letters ZR.

M+S or M/S: Mud and Snow

AT: All Terrain.
AS: All Season. The "M+S" or "M/S" indicates that the tire has some functional use in mud and snow.

U.S. DOT Tire Identification Number (TIN)

This begins with the letters "DOT" which indicates the tire meets all federal standards. The next two numbers or letters are the plant code where it was manufactured, and the last four numbers represent the week and year the tire was manufactured. For example, the numbers 457 means the 45st week of 1997. After 2000 the numbers go to four digits. For example, the number 2102 means the 21th week of 2002. The other numbers are marketing codes used at the manufacturer's discretion. This information is used to contact consumers if a tire defect requires a recall.

Tire Ply Composition and Materials Used

The number of plies indicates the number of layers of rubber-coated fabric in the tire. In general, the greater the number of plies, the more weight a tire can support. Tire manufacturers also must indicate the tire materials, which include steel, nylon, polyester, and other.

Maximum Load Rating

This number indicates the maximum load in kilograms and pounds that can be carried by the tire.

Maximum Permissible Inflation Pressure

This number is the greatest amount of air pressure that should ever be put in the tire under normal driving conditions.

Tread Wear, Traction and Temperature Grades

Tread wear: The tread wear grade is a comparative rating based on the wear rate of the tire when tested under controlled conditions on a specified government test course. For example, a tire graded 150 would wear one and one-half (1 1/2) times as well on the government course as a tire graded 100.
Traction: The traction grades, from highest to lowest are AA, A, B, and C. The grades represent the tire's ability to stop on wet pavement as measured under controlled conditions on specified government test surfaces of asphalt and concrete. A tire marked C may have poor traction performance.
Temperature: The temperature grades are A (the highest), B and C, representing the tire's resistance to the generation of heat and its ability to dissipate heat when tested under controlled conditions on a specified indoor laboratory test wheel.

Snow Tires

In some heavy snow areas, local governments may require true snow tires, those with very deeply cut tread. These tires should only be used in pairs or placed on all four wheels. Make sure you purchase snow tires that are the same size and construction type as the other tires on your vehicle.

SAFETY WARNING

The following safety warning appears on the tire's sidewall.
SERIOUS INJURY MAY RESULT FROM:

- EXPLOSION OF TIRE/RIM ASSEMBLY DUE TO IMPROPER MOUNTING-MATCH TIRE DIAMETER TO RIM DIAMETER; NEVER EXCEED 40 psi (275 kPa) TO SEAT BEADS-ONLY SPECIALLY TRAINED PERSONS SHOULD MOUNT TIRES.
- TIRE FAILURE DUE TO UNDER-INFLATION/OVERLOADING/DAMAGE-FOLLOW OWNER'S MANUAL AND PLACARD IN VEHICLE-FREQUENTLY CHECK INFLATION PRESSURE AND INSPECT FOR DAMAGE.

Tire Information (U.S.A.)

▼Information on Temporary Tires

Please refer to the diagram below.

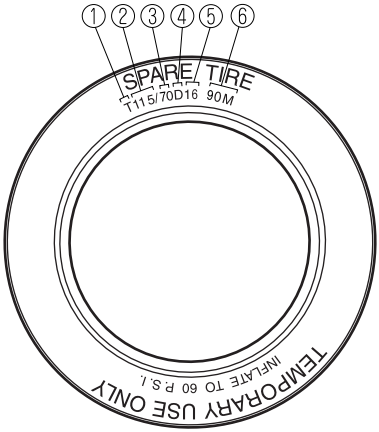

1. Temporary tires
2. Nominal width of tire in millimeters
3. Ratio of height to width (aspect ratio)
4. Diagonal
5. Rim diameter code
6. Load index&speed symbol

T115/70D 16 90M is an example of a tire size and load index rating. Here is an explanation of the various components of that tire size and load index rating. Note that the tire size and load index rating may be different from the example.

T

Indicates a tire that may be installed on cars, SUVs, minivans and light trucks as designated by the Tire and Rim Association (T&RA).

115

“115” is the nominal width of the tire in millimeters. This three-digit number gives the width in millimeters of the tire from sidewall edge to sidewall edge. In general, the larger the number, the wider the tire.

70

“70” is the aspect ratio. This two-digit number indicates the tire's ratio of height to width.

D

“D” is the tire construction symbol. D indicates “diagonal ply construction”.

16

“16” is the wheel rim diameter in inches.

90

“90” is the Load Index. This two-or three-digit number indicates how much weight each tire can support.

M

“M” is the speed rating. The speed rating denotes the maximum speed for which the use of the tire is rated.

Letter Rating	Speed Rating
M	81 mph

Location of the Tire Label (Placard)

You will find the tire label containing tire inflation pressure by tire size and other important information on the driver's side B-pillar or on the edge of the rear door on the driver's side.

SAMPLE

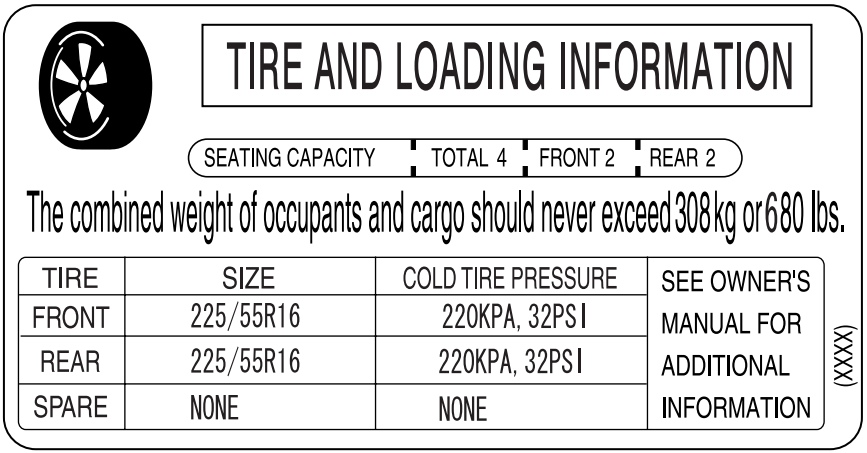

TIRE AND LOADING INFORMATION

SEATING CAPACITY | TOTAL 4 | FRONT 2 | REAR 2

The combined weight of occupants and cargo should never exceed 308 kg or 680 lbs.

TIRE	SIZE	COLD TIRE PRESSURE	SEE OWNER'S MANUAL FOR ADDITIONAL INFORMATION
FRONT	225/55R16	220KPA, 32PSI	
REAR	225/55R16	220KPA, 32PSI	
SPARE	NONE	NONE	

(XXXX)

▼Recommended Tire Inflation Pressure

On the tire label you will find the recommended tire inflation pressure in both kPa and psi for the tires installed as original equipment on the vehicle. It is very important that the inflation pressure of the tires on your vehicle is maintained at the recommended pressure. You should check the tire pressure regularly to insure that the proper inflation pressure is maintained.
Refer to Tires on page 10-6.

NOTE
Tire pressures listed on the vehicle placard or tire information label indicate the recommended cold tire inflation pressure, measured when the tires are cold, after the vehicle has been parked for at least 3 hours. As you drive, the temperature in the tire warms up, increasing the tire pressure.

⚠ WARNING

Always check the tire inflation pressures on a regular basis according to the recommended tire inflation pressure on the tire label and in conjunction with the information in this owner's manual:

Driving your vehicle with under-inflated tires is dangerous.
Under-inflation is the most common cause of failures in any kind of tire and may result in severe cracking, tread separation or "blowout", with unexpected loss of vehicle control and increased risk of injury. Under-inflation increases sidewall flexing and rolling resistance, resulting in heat buildup and internal damage to the tire. It results in unnecessary tire stress, irregular wear, loss of control and accidents. A tire can lose up to half of its air pressure and not appear to be flat!
It is impossible to determine whether or not tires are properly inflated just by looking at them.

▼Checking Tire Pressure

1. When you check the air pressure, make sure the tires are cold —meaning they are not hot from driving even a mile.
2. Remove the cap from the valve on one tire.
3. Firmly press a tire gauge onto the valve.
4. Add air to achieve recommended air pressure.
5. If you overfill the tire, release air by pushing on the metal stem in the center of the valve. Then recheck the pressure with your tire gauge.
6. Replace the valve cap.
7. Repeat with each tire, including the spare.

NOTE
Some spare tires require higher inflation pressure.

8. Visually inspect the tires to make sure there are no nails or other objects embedded that could poke a hole in the tire and cause an air leak.
9. Check the sidewalls to make sure there are no gouges, cuts, bulges, cracks or other irregularities.

NOTE
Warm tires normally exceed recommended pressures. Don't release air from warm tires to adjust the pressure.
Under-inflation can cause serious failures and accidents.
Over-inflation can produce a harsh ride and the greater possibility of damage from road hazards.

Tire Information (U.S.A.)

▼Glossary of Terms

Tire Placard: A label indicating the OE tire sizes, recommended inflation pressure, and the maximum weight the vehicle can carry.
Tire Identification Number (TIN): A number on the sidewall of each tire providing information about the tire brand and manufacturing plant, tire size, and date of manufacture.
Inflation Pressure: A measure of the amount of air in a tire.
kPa: Kilopascal, the metric unit for air pressure.
psi: Pounds per square inch, the English unit for air pressure.
B-pillar: The structural member at the side of the vehicle behind the front door.
Original Equipment (OE): Describes components originally equipped on the vehicle.
Vehicle Load Limit: The maximum value of the combination weight of occupants and cargo.
Bead Area of the Tire: Area of the tire next to the rim.
Sidewall Area of the Tire: Area between the bead area and the tread.
Tread Area of the Tire: Area on the perimeter of the tire that contacts the road when it's mounted on the vehicle.

Seating capacity means the total allowable number of vehicle occupants. Seating capacity is described on the tire label.

Production options weight is the combination weight of installed regular production options weighing over 2.3 kilograms in excess of the standard items which they replace, and not previously considered in the curb weight or accessory weight, including heavy duty brakes, ride levelers, roof rack, heavy duty battery, and special trim.

Rim is the metal support (wheel) for a tire or a tire and tube assembly upon which the tire beads are seated.

Tire Maintenance

Improper or inadequate vehicle maintenance can cause tires to wear abnormally. Here are some important maintenance points:

▼Tire Inflation Pressure

Inspect all tire pressure monthly (including the spare) when the tires are cold. Maintain recommended pressures for the best ride, top handling, and minimum tire wear. Use the pressures specified on the vehicle tire information placard or tire label for optimum service.

▼Tire Rotation

To equalize tread wear, rotate the tires every 12,000 km (7,500 miles) or sooner if irregular wear develops. During rotation, inspect them for correct balance.

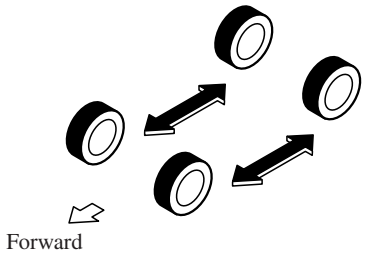

Inspect the tires for uneven wear and damage. Abnormal wear is usually caused by one or a combination of the following:

- Incorrect tire pressure
- Improper wheel alignment
- Out-of-balance wheel
- Severe braking

After rotation, inflate all tire pressures to specification (page 10-6) and inspect the lug nuts for tightness.

⚠ CAUTION

Rotate unidirectional tires and radial tires that have an asymmetrical tread pattern or studs only from front to rear, not from side to side. Tire performance will be weakened if rotated from side to side.

(With limited-slip differential)
Don't use the following:
- *Tires not of the designated size*
- *Tires of different sizes or types at the same time*
- *Tires not sufficiently inflated*

If these instructions aren't followed, the rotation of the left and right wheels will be different and will thus apply a constant load on the limited-slip differential.
This will cause a malfunction.

▼Replacing a Tire

⚠ WARNING

Always use tires that are in good condition:
Driving with worn tires is dangerous. Reduced braking, steering, and traction could result in an accident.

If a tire wears evenly, a wear indicator will appear as a solid band across the tread. Replace the tire when this happens.

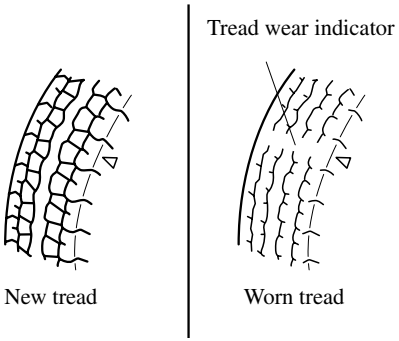

You should replace it before the band is across the entire tread.

NOTE
Tires degrade over time, even when they are not being used on the road. It is recommended that tires generally be replaced when they are 6 years or older. Heat caused by hot climates or frequent high loading conditions can accelerate the aging process. You should replace the spare tire when you replace the other road tires due to the aging of the spare tire. Regarding the manufacturing week and year is indicated with 4 digit. Refer to The tire labeling on page 9-18.

▼Safety Practices

The way you drive has a great deal to do with your tire mileage and safety. So cultivate good driving habits for your own benefit.

- Observe posted speed limits
- Avoid fast starts, stops and turns
- Avoid potholes and objects on the road
- Do no run over curbs or hit the tire against the curb when parking

⚠ CAUTION

If you feel a sudden vibration or ride disturbance while driving or you suspect your tire or vehicle has been damaged, immediately reduce your speed. Drive with caution until you can safely pull off the road. Stop and inspect the tire for damage. If the tire is under-inflated or damaged, deflate it, remove the tire and rim and replace it with your spare tire. If you cannot detect a cause, have the vehicle towed to the nearest vehicle or tire dealer to have the vehicle inspected.

Vehicle Loading

⚠ WARNING

Do not taw a trailer with this vehicle:

Towing a trailer with this vehicle is dangerous because it has not been designed to tow a trailer and doing so will affect the drive system which could result in vehicle damage.

This section will guide you in the proper loading of your vehicle and/or trailer, to keep your loaded vehicle weight within its design rating capability, with or without a trailer. Properly loading your vehicle will provide maximum return of vehicle design performance. Before loading your vehicle, familiarize yourself with the following terms for determining your vehicle's weight ratings, with or without a trailer, from the vehicle's Safety Certification Label and Tire and Load Information Label:

⚠ WARNING

Overloaded Vehicle:

Overloading a vehicle is dangerous. The results of overloading can have serious consequences in terms of passenger safety. Too much weight on a vehicle's suspension system can cause spring or shock absorber failure, brake failure, handling or steering problems, irregular tire wear, tire failure or other damage. Overloading makes a vehicle harder to drive and control. It also increases the distance required for stopping. In cases of serious overloading, brakes can fail completely, particularly on steep grades. The load a tire will carry safely is a combination of the size of the tire, its load range, and corresponding inflation pressure.

Never overload the vehicle and always observe the vehicle's weight ratings from the vehicle's Safety Certification and Tire and Load Information labels.

Base Curb Weight is the weight of the vehicle including a full tank of fuel and all standard equipment. It does not include passengers, cargo, or optional equipment.

Vehicle Curb Weight is the weight of your new vehicle when you picked it up from your dealer plus any aftermarket equipment.

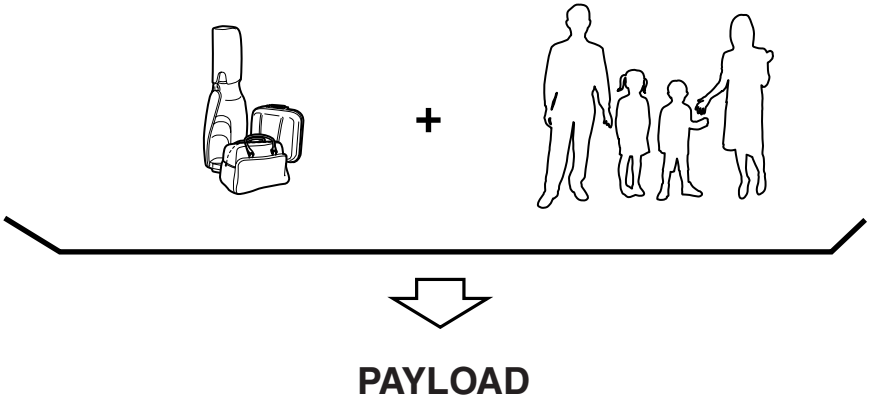

Payload is the combination weight of cargo and passengers that the vehicle is designed to carry. The maximum payload for your vehicle can be found on the Tire and Load Information label on the rear door on the driver's side or door pillar. Look for “THE COMBINATION WEIGHT OF OCCUPANTS AND CARGO SHOULD NEVER EXCEED XXX kg or XXX lbs” for your maximum payload. The payload listed on the tire label is the maximum payload for the vehicle as built by the assembly plant. If any aftermarket or dealer installed equipment has been installed on the vehicle, the weight of the equipment must be subtracted from the payload listed on the tire label in order to be accurate.

SAMPLE

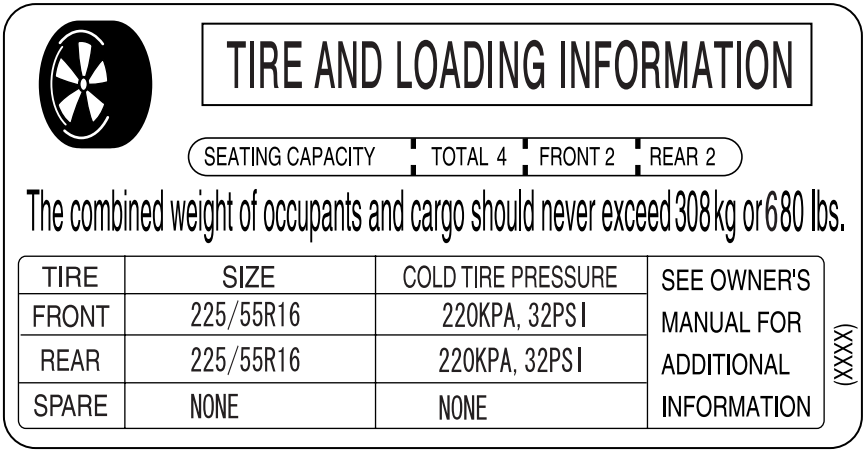

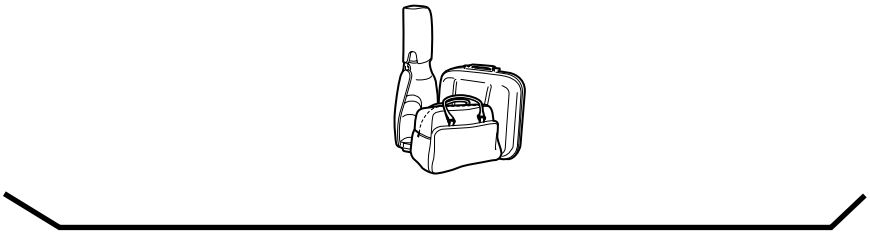

CARGO

Cargo Weight includes all weight added to the Base Curb Weight, including cargo and optional equipment. When towing, trailer tongue load or king pin weight is also part of cargo weight.

The cargo weight limit decreases depending on the number of vehicle occupants. The cargo weight limit can be calculated by subtracting the total weight of the vehicle occupants from the “combination weight of occupants and cargo should never exceed” value on the tire label.

Examples: Based on a single occupant weight of 68 kg (150 lbs), and a value of 385 kg (849 lbs) for the “combination weight of occupants and cargo should never exceed”:
The cargo weight limit with one occupant is 385 kg (849 lbs) – 68 kg (150 lbs) = 317 kg (699 lbs)
The cargo weight limit with two occupants is 385 kg (849 lbs) – (68 × 2) kg ((150 × 2) lbs) = 249 kg (549 lbs)
If the weight of the occupant increases, the cargo weight limit decreases by that much.

GAW (Gross Axle Weight) is the total weight placed on each axle (front and rear) - including vehicle curb weight and all payload.

GAWR (Gross Axle Weight Rating) is the maximum allowable weight that can be carried by a single axle (front or rear). **These numbers are shown on the Safety Compliance Certification Label located on the rear door on the driver's side or door pillar. The total load on each axle must never exceed its GAWR.**

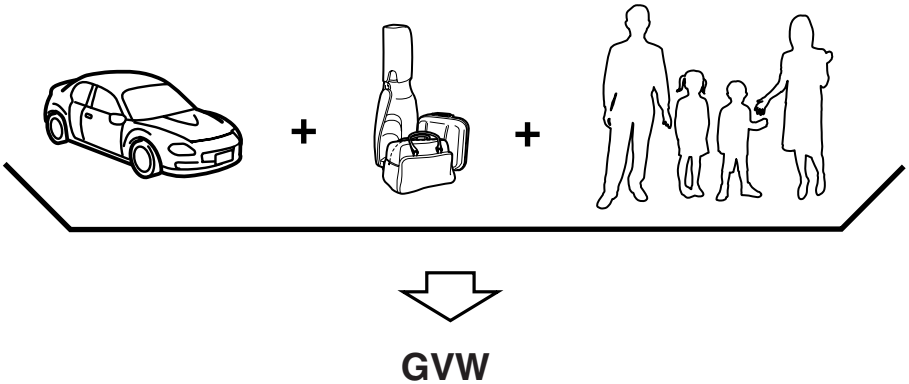

GVW (Gross Vehicle Weight) is the Vehicle Curb Weight + cargo + passengers.

GVWR (Gross Vehicle Weight Rating) is the maximum allowable weight of the fully loaded vehicle (including all options, equipment, passengers and cargo). **The GVWR is shown on the Safety Compliance Certification Label located on the rear door on the driver's side or door pillar. The GVW must never exceed the GVWR.**

Tire Information (U.S.A.)

SAMPLE

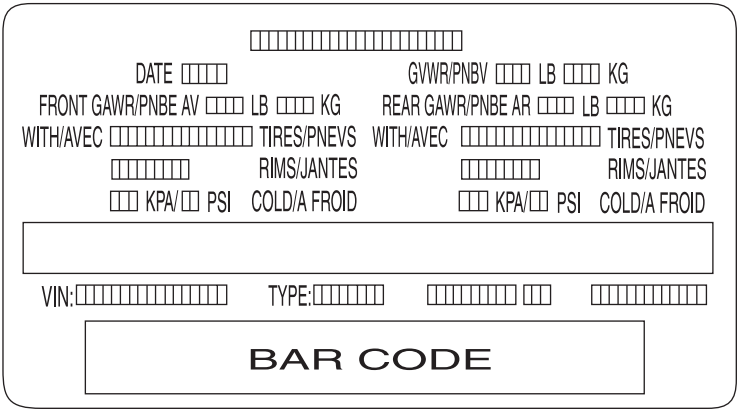

⚠ WARNING

Exceeding Axle Weight Rating Limits:

Exceeding the Safety Certification Label axle weight rating limits is dangerous and could result in death or serious injury as a result of substandard vehicle handling, performance, engine, transmission and/or structural damage, serious damage to the vehicle, or loss of control.

Always keep the vehicle within the axle weight rating limits.

Do not taw a trailer with this vehicle:

Towing a trailer with this vehicle is dangerous because it has not been designed to tow a trailer and doing so will affect the drive system which could result in vehicle damage.

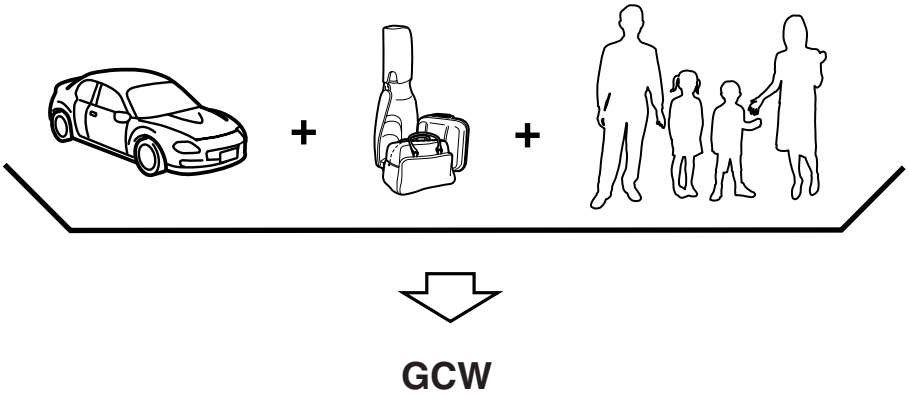

GCW (Gross Combination Weight) is the weight of the loaded vehicle (GVW) plus the weight of the fully loaded trailer.

GCWR (Gross Combination Weight Rating) is the maximum allowable weight of the vehicle and the loaded trailer - including all cargo and passengers - that the vehicle can handle without risking damage. (Important: The towing vehicle's braking system is rated for operation at GVWR, not at GCWR. Separate functional brakes should be used for safe control of towed vehicles and for trailers weighing more than 1,500 lbs). **The GCW must never exceed the GCWR.**

Maximum Loaded Trailer Weight is the highest possible weight of a fully loaded trailer the vehicle can tow. It assumes a vehicle with only mandatory options, no cargo (internal or external), a tongue load of 10–15% (conventional trailer) or king pin weight of 15–25% (fifth-wheel trailer), and driver only (150 lbs). **Consult your dealership (or the RV and Trailer Towing Guide provided by your dealership) for more detailed information.**
Tongue Load or Fifth-Wheel King Pin Weight refers to the amount of the weight that a trailer pushes down on a trailer hitch.

Examples: For a 5000 lb conventional trailer, multiply 5000 by 0.10 and 0.15 to obtain a proper tongue load range of 500 to 750 lbs. For an 11,500 lb fifth-wheel trailer, multiply by 0.15 and 0.25 to obtain a proper king pin load range of 1,725 to 2,875 lbs.

Tire Information (U.S.A.)

WARNING

Exceeding GVWR or GAWR Specifications:

Exceeding the GVWR or the GAWR specified on the certification label is dangerous. Exceeding any vehicle rating limitation could result in a serious accident, injury, or damage to the vehicle.

Do not use replacement tires with lower load carrying capacities than the originals because they may lower the vehicle's GVWR and GAWR limitations. Replacement tires with a higher limit than the originals do not increase the GVWR and GAWR limitations.

Never exceed the GVWR or the GAWR specified on the certification label.

Steps for Determining the Correct Load Limit:

Steps for Determining Correct Load Limit:

(1) Locate the statement “The combined weight of occupants and cargo should never exceed XXX kg or XXX lbs” on your vehicle's placard.
(2) Determine the combined weight of the driver and passengers that will be riding in your vehicle.
(3) Subtract the combined weight of the driver and passengers from XXX kg or XXX lbs.
(4) The resulting figure equals the available amount of cargo and luggage load capacity. For example, if the “XXX” amount equals 1400 lbs. and there will be five 150 lb passengers in your vehicle, the amount of available cargo and luggage load capacity is 650 lbs. (1400– 750 (5 × 150) = 650 lbs.)
(5) Determine the combined weight of luggage and cargo being loaded on the vehicle. That weight may not safely exceed the available cargo and luggage load capacity calculated in Step 4.
(6) If your vehicle will be towing a trailer, the load from your trailer will be transferred to your vehicle. Consult this manual to determine how this reduces the available cargo and luggage load capacity of your vehicle.

Reporting Safety Defects (U.S.A.)

If you believe that your vehicle has a defect which could cause a crash or could cause injury or death, you should immediately inform the National Highway Traffic Safety Administration (NHTSA) in addition to notifying Mazda Motor Corporation (Your Mazda Importer/Distributor).

If NHTSA receives similar complaints, it may open an investigation, and if it finds that a safety defect exists in a group of vehicles, it may order a recall and remedy campaign. However, NHTSA cannot become involved in individual problems between you, your dealer, or Mazda Motor Corporation (Your Mazda Importer/Distributor).

To contact NHTSA, you may call the Vehicle Safety Hotline toll-free at 1-888-327-4236 (TTY: 1-800-424-9153) ; go to http://www.safercar.gov; or write to: Administrator, NHTSA, 400 Seventh Street, SW., Washington, DC 20590. You can also obtain other information about motor vehicle safety from http://www.safercar.gov.

NOTE
If you live in the U.S.A., all correspondence to Mazda Motor Corporation should be forwarded to:

Mazda North American Operations
7755 Irvine Center Drive
Irvine, California 92618-2922
P.O. Box 19734
Irvine, CA 92623-9734
Customer Assistance Center or toll free at 1 (800) 222-5500

If you live outside of the U.S.A., please contact the nearest Mazda Distributor shown (page 9-8) in this booklet.

Reporting Safety Defects (Canada)

Canadian customers who wish to report a safety-related defect to Transport Canada, Defect Investigations and Recalls, may telephone the toll free hotline 1-800-333-0510, or contact Transport Canada by mail at: Transport Canada, ASFAD, Place de Ville Tower C, 330 Sparks Street, Ottawa ON K1A 0N5.

For additional road safety information, please visit the Road Safety website at: http://www.tc.gc.ca/roadsafety/menu.htm

Service Publications

Factory-authorized Mazda service publications are available for owners who wish to do some of their own maintenance and repair.

When requesting any of our publications through an Authorized Mazda Dealer, refer to the chart below.

If they don't have what you need in stock, they can order it for you.

PUBLICATION ORDER NUMBER	PUBLICATION DESCRIPTION
9999-95-064B-08	2008 WORKSHOP MANUAL (English)
9999-95-040G-08	2008 WIRING DIAGRAM (English)
9999-95-079C-08R (U.S.A. only)	2008 OWNER'S MANUAL
9999-EC-079C-08R (Canada only)	2008 OWNER'S MANUAL
9999-PR-079C-08R (Puerto Rico only)	2008 OWNER'S MANUAL
9999-95-010F-08	2008 SERVICE HIGHLIGHTS
9999-95-011D-08NAV (U.S.A. only)	2008 NAVIGATION SYSTEM OWNER'S MANUAL
9999-EC-011D-08NAV (Canada only)	2008 NAVIGATION SYSTEM OWNER'S MANUAL

▼WORKSHOP MANUAL:

Covers recommended maintenance and repair procedures of the drive train, body and chassis.

▼WIRING DIAGRAM:

Provides electrical schematics as well as component location for the entire electrical system.

▼OWNER'S MANUAL:

This booklet contains information regarding the proper care and operation of your vehicle. This is not a technician's manual.

▼SERVICE HIGHLIGHTS:

Provides description and operation of the many systems of your Mazda.

▼NAVIGATION SYSTEM OWNER'S MANUAL:

This booklet contains information regarding the proper operation and use of the navigation system. This is not a technician's manual.

10 Specifications

Technical information about your Mazda.

Identification Numbers 10-2
Vehicle Information Labels 10-2

Specifications 10-4
Specifications 10-4

Vehicle Information Labels

▼Vehicle Identification Number

The vehicle identification number legally identifies your vehicle. The number is on a plate attached to the left top side of the dashboard. This plate can easily be seen through the windshield.

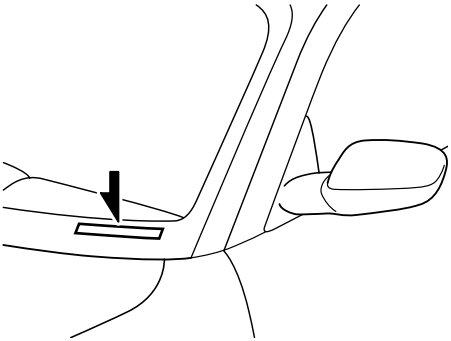

▼Motor Vehicle Safety Standard Label

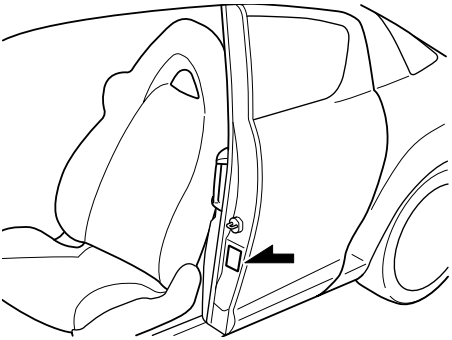

▼Chassis Number

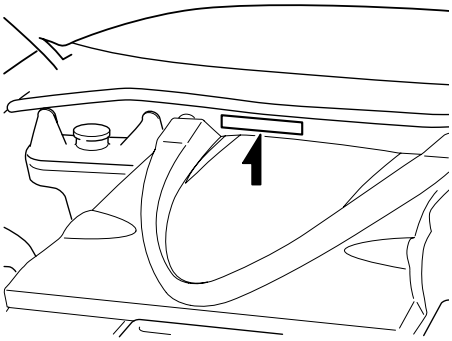

▼Vehicle Emission Control Information Label

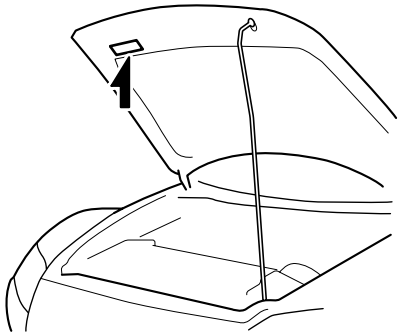

▼Tire Pressure Label

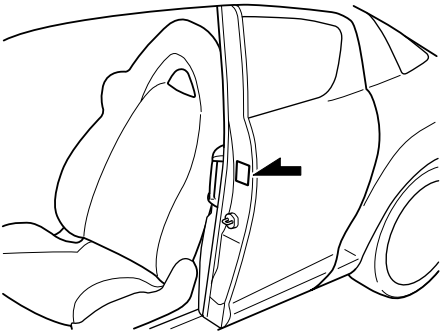

▼Engine Number

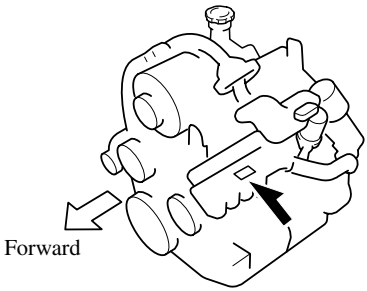

Specifications

▼Engine

Item	Model
Type	Rotary engine
Displacement	654 ml × 2 (654 cc × 2, 40.0 cu in × 2)
Compression ratio	10.0

▼Electrical System

Item		Classification
Battery		12V-52AH/5HR
Spark-plug number	Trailing side	N3Y1 18 110A, N3H1 18 110D*1
	Leading side	N3Y8 18 110A, N3Y9 18 110A, N3H5 18 110A*1
Spark-plug gap		1.15—1.25 mm (0.046—0.049 in)

*1 ex factory

⚠ CAUTION

When cleaning the iridium plugs, do not use a wire brush. The fine particulate coating on the iridium alloy and platinum tips could be damaged.

▼Lubricant Quality

Lubricant	Classification
Engine oil	Refer to the recommended SAE viscosity numbers on page 8-11.
Manual transmission oil	API Service GL-4 (SAE 75W-90)
Automatic transmission fluid	JWS3309
Rear differential oil	API Service GL-5 (SAE 90)
	API Service GL-5 (SAE 80W-90)
	API Service GL-5 (SAE 75W-90)*
Brake/Clutch fluid	SAE J1703 or FMVSS116 DOT-3

* Not available from Mazda

▼Capacities

(Approximate Quantities)

Item		Capacity
Engine oil	With oil filter replacement	3.5 L (3.7 US qt, 3.1 Imp qt)
	Without oil filter replacement	3.3 L (3.5 US qt, 2.9 Imp qt)
Coolant		9.8 L (10.4 US qt, 8.6 Imp qt)
Manual transmission oil		1.75 L (1.85 US qt, 1.54 Imp qt)
Automatic transmission fluid		7.9 L (8.4 US qt, 7.0 Imp qt)
Rear differential oil		1.3 L (1.4 US qt, 1.1 Imp qt)
Fuel tank		60 L (15.9 US gal, 13.2 Imp gal)

Check oil and fluid levels with dipsticks or reservoir gauges.

▼Dimensions

Item	Model
Overall length	4,425 mm (174.2 in), 4,430 mm*(174.4 in)
Overall width	1,770 mm (69.7 in)
Overall height	1,340 mm (52.8 in)
Front tread	1,500 mm (59.1 in)
Rear tread	1,505 mm (59.3 in)
Wheelbase	2,700 mm (106.3 in)

* With license plate holder

▼Weights

Item		Weight	
		Manual transmission	Automatic transmission
GVWR (Gross Vehicle Weight Rating)		1,728 kg (3,810 lbs)	1,748 kg (3,854 lbs)
GAWR (Gross Axle Weight Rating)	Front	827 kg (1,823 lbs)	846 kg (1,865 lbs)
	Rear	901 kg (1,986 lbs)	907 kg (2,000 lbs)

▼Air Conditioner

Item	Classification
Refrigerant Type	HFC134a (R-134a)

▼Light Bulbs

Exterior light

Light bulb			Category	
			Wattage	ECE R (SAE)
Headlights	High beam		65	H9 (—)
	Low beam	Halogen	55	H7 (—)
		Xenon fusion	35	D2S (—)
Front turn signal lights			21	WY21W (—)
Parking lights			5	W5W (—)
Fog lights*			55	H11 (—)
Front side-marker lights			3.8	— (#194)
High-mount brake light			21	W21W (#7440)
Rear turn signal lights			21	WY21W (—)
Brake lights/Taillights			21/5	W21/5W (#7743)
Reverse lights			21	W21W (#7440)
License plate lights			5	W5W (—)
Rear side-marker lights			0.57	— (—)

The rear side-marker light bulbs cannot be replaced because they are an LED-type bulb.
The rear combination component must be replaced.

Interior light

Light bulb	Category	
	Wattage	ECE R
Trunk light	5	W5W
Overhead light/Map lights (Front)	5	W5W
Overhead light (Rear)	10	—
Courtesy lights	5	W5W
Vanity mirror lights	2	—

▼Tires

NOTE

The tires have been optimally matched with the chassis of your vehicle.
When replacing tires, Mazda recommends that you replace tires of the same type originally fitted to your vehicle. For details, contact an Authorized Mazda Dealer.

*Some models.

Check the tire pressure label for tire size and inflation pressure.
Refer to Tire Inflation Pressure on page 8-22.

Tire size	Inflation pressure	
	Front	Rear
225/55R16 94V	220 kPa (32 psi)	220 kPa (32 psi)
225/45R18 91W		

Vehicle capacity weight: 308 kg (680 lbs)

▼Fuses

Refer to the fuse rating on page 8-34.

11 Index

A

Accessory Socket 6-53
Add-On Non-Genuine Parts and Accessories 9-13
Advanced Key 3-2
  Advanced key maintenance 3-5
  Advanced key suspend function 3-16
  Auxiliary key 3-15
  Locking, unlocking with request switch 3-8
  Opening the trunk lid with request switch 3-9
  Operational range 3-7
  Remote control function 3-13
  Service 3-6
Air Bag Systems 2-33
Ambient Temperature Display 6-46
Antenna 6-10
Anti-Lock Brake System (ABS) 5-8
  Warning light 5-8
Appearance Care 8-39
Ashtray 6-48
Audio System 6-10
  Audio control switch 6-40
  Audio set 6-21
  Operating tips for audio system 6-10
  Safety certification 6-42
Automatic Transmission
  Driving tips 5-18
  Manual shift mode 5-14
  Shift-lock system 5-14
  Transmission ranges 5-13

B

Battery
  Emergency starting 7-18
  Maintenance 8-20
  Specifications 10-4
Beep Sounds
  Engine overrev warning beep 5-53
  Ignition key reminder 5-53
  Lights-on reminder 5-53
  Seat belt warning beep 5-53
  Tire inflation pressure warning beep 5-54
Before Starting the Engine 4-5
  After getting in 4-5
  Before getting in 4-5
Body Lubrication 8-17
Brake/Clutch
  Fluid 8-15
Brakes
  Anti-lock brake system (ABS) 5-8
  Foot brake 5-5
  Pad wear indicator 5-9
  Parking brake 5-6
  Warning light 5-7
Break-In Period 4-6
Bulb Replacement 8-27

C

Capacities 10-5
Carbon Monoxide 4-4
Catalytic Converter 4-3
Cell Phones 9-14
Center Console 6-51
Child Restraint
  Installing child-restraint systems 2-24
  LATCH child-restraint systems 2-30

C

Cigarette Lighter 6-47
Climate Control System 6-2
Gas specifications 10-5
Clock 6-46
Coin Box 6-50
Courtesy Lights 6-44
Cruise Control 5-20
Cup Holder 6-49
Customer Assistance 9-2

D

Dashboard Illumination 5-37
Daytime Running Lights 5-56
Defroster
Rear window 5-60
Dimensions 10-5
Door Locks 3-26
Driving In Flooded Area 4-9
Driving Tips 4-6
Automatic transmission 5-18
Break-in period 4-6
Driving in flooded area 4-9
Hazardous driving 4-7
Money-saving suggestions 4-6
Rocking the vehicle 4-7
Winter driving 4-8
Dynamic Stability Control (DSC) 5-24
DSC OFF indicator light 5-25
DSC OFF switch 5-26
TCS/DSC Indicator light 5-25

E

Emergency Starting 7-18
Jump-starting 7-19
Push-starting 7-22
Emergency Towing 7-23

E

Emission Control System 4-3
Engine
Coolant 8-13
Exhaust gas 4-4
Hood release 3-38
Oil 8-11
Overheating 7-16
Starting 5-4
Engine Compartment Overview 8-10
Engine Coolant
Overheating 7-16
Engine Coolant Temperature
Gauge 5-36
Exhaust Gas 4-4
Exterior Care 8-41

F

Flasher
Hazard warning 5-61
Headlights 5-55
Flat Tire 7-3
Changing 7-11
Instant Mobility System
(IMS) Emergency Flat Tire Repair
Kit 7-5
Spare tire and tool storage 7-3
Fluids
Classification 10-4
Owner maintenance 8-8
Fog Lights 5-57
Foot Brake 5-5
Front Seats
(Electrically Operated Seats) 2-5
Front Seats
(Manually Operated Seats) 2-2

F

Fuel
Filler lid and cap 3-37
Gauge 5-36
Requirements 4-2
Tank capacity 10-5
Fuses 8-34
Panel description 8-36
Replacement 8-34

G

Gauges 5-33
Glove Box 6-50

H

Hazard Warning Flasher 5-61
Hazardous Driving 4-7
Headlight Washer 5-59
Headlights
Control 5-55
Flashing 5-56
High-low beam 5-56
Leveling 5-56
On reminder 5-55
HomeLink Wireless Control
System 5-61
Hood Release 3-38
Horn 5-60

I

Ignition
Keys 3-21
Switch 5-2
Illuminated Entry System 6-43
Immobilizer System
(with Advanced Key) 3-41

I

Immobilizer System
(without Advanced Key) 3-43
Indicator Lights 5-39
Cruise 5-52
DSC OFF 5-51
Headlight auto-leveling
malfunction 5-53
Headlight high-beam 5-50
power steering malfunction 5-52
Security 5-50
Shift position 5-51
TCS/DSC 5-51
Turn-signal/hazard warning 5-53
Information Display 6-45
Ambient temperature display 6-46
Audio display 6-47
Climate control display 6-46
Clock 6-46
Information display functions 6-45
Inside Trunk Release Lever 3-33
Instrument Cluster 5-33
Interior Care 8-44
Interior Lights 6-43

J

Jump-Starting 7-19

K

Keyless Entry System 3-22
Keys 3-21

L

Label Information 10-2
Lane-Change Signals 5-57

L

Light Bulbs
Replacement 8-27
Specifications 10-6
Lighter 6-47
Lighting Control 5-55
Lubricant Quality 10-4

M

Maintenance
Introduction 8-2
Owner maintenance precautions... 8-9
Owner maintenance schedule 8-8
Scheduled 8-3
Manual Transmission Operation 5-10
Recommendations for shifting.... 5-11
Map Lights 6-44
Meters and Gauges 5-33
Mirrors
Outside mirrors 3-48
Rearview mirror 3-49
Money-Saving Suggestions 4-6
Moonroof 3-39

O

Odometer and Trip Meter 5-34
Outside Mirrors 3-48
Overhead Console 6-50
Overhead Lights 6-44
Overheating 7-16
Overloading 4-10

P

Paint Damage 8-39
Parking Brake 5-6
Parking in an Emergency 7-2

P

Power Door Locks 3-28
Power Steering 5-19
Power steering malfunction indicator light 5-19
Power Windows 3-34
Push-Starting 7-22

R

Rear Quarter Windows 3-36
Rear Seat 2-8
Rear Window Defroster 5-60
Rearview Mirror 3-49
Recreational Towing 7-25
Registering Your Vehicle in A Foreign Country 9-12
Rocking the Vehicle 4-7

S

Safety Defects, Reporting 9-38
Seat Belt System
3-point type 2-13
Automatic locking 2-11
Belt minder 2-18
Emergency locking 2-11
Extender 2-17
Location of seat belt 2-12
Pregnant women 2-11
Pretensioner and load limiting 2-14
Seat belt precautions 2-9
Warning light/beep 2-18

S

Seats
Front seat
(Electrically operated seats) 2-5
Front seat
(Manually operated seats) 2-2
Rear seat 2-8
Seat warmer 2-8
Security System
Immobilizer system
(with advanced key) 3-41
Immobilizer system
(without advanced key) 3-43
Service Publications 9-40
Spare Tire and Tool Storage 7-3
Specifications 10-4
Speed Unit Selector 5-34
Speedometer 5-34
SRS Air Bags
How the Air Bags Work 2-40
Supplemental restraint systems
precautions 2-33
Starting the Engine 5-4
Steering Wheel 3-48
Horn 5-60
Storage Box 6-51
Storage Compartments 6-50
Center console 6-51
Coin box 6-50
Glove box 6-50
Overhead console 6-50
Storage box 6-51
Sunshade 3-40
Sunvisors 6-43

T

Tachometer 5-35
Temporary Spare Tire 8-25

T

Theft-Deterrent System 3-46
Tiedown
Hook 7-24
Tire Information 9-18
Tire Pressure Monitoring System 5-27
System error activation 5-31
Tire pressure monitoring system
warning light 5-29
Tires and wheels 5-31
Tires
Flat tire 7-3
Inflation pressure 8-22
Replacement 8-24
Rotation 8-23
Snow tires 4-8
Spare tire and tool storage 7-3
Specifications 10-6
Tire chains 4-9
Uniform tire quality grading system
(UTQGS) 9-16
Tool 7-3
Towing
Description 7-23
Emergency towing 7-23
Recreational towing 7-25
Trailer towing 4-11
Traction Control System (TCS) 5-23
TCS/DSC indicator light 5-24
Trailer Towing 4-11
Trip Meter 5-34
Trunk Lid 3-31
Inside trunk release lever 3-33
Trunk Light 3-33
Turn and Lane-Change Signals 5-57

V

Vanity Mirrors 6-43

V

Vehicle Information Labels 10-2

W

Warning Lights 5-39
ABS 5-41
Air bag system 5-44
Automatic transmission 5-46
Brake system 5-41
Charging system 5-42
Check engine 5-43
Door-ajar 5-45
Engine coolant level 5-43
Engine oil level 5-42
Front seat belt pretensioner system 5-44
KEY Warning Light (Red)/KEY Indicator Light (Green) 5-49
Low fuel 5-44
Low washer fluid level 5-46
seat belt 5-45
Tire pressure monitoring system 5-46
Warranty 9-9
Washer Fluid 8-16
Weights 10-5
Wheel Replacement 8-26
Windows
Power windows 3-34
Rear quarter windows 3-36
Windshield Washer 5-59
Windshield Wipers 5-58
Blades replacement 8-18
Winter Driving 4-8